THE AUTOGEM INVICTA TEAM

Adit Chopra, CEO

I'm delighted to introduce you to our export team here at Autogem Invicta. Alongside my brother Prashant and with the support of our factories in the Far East we have spent 20 years building the business to the position of strength it now finds itself in. Our acquisition of Autogem in 2005 has helped the company expand tremendously and with the support of our fantastic Export team we continue to strive to be the global leader in our category.

We work in close partnership with the very best companies in our sector and with their increasing technological and logistical demands we find ourselves ever improving. Thank you for your continued support and thank you for choosing Autogem Invicta.

Angel Erdozáin Acedo / Navarra-Spain

Having studied Economics and Management in Zaragoza, I went on to spend 23 fantastic years at the catalytic converter manufacturer AS,SL where I eventually grew to become one of their most senior sales people. In 2012, I established Interconsultancy.es where I have specialised working with some of the top European manufacturers in their respective fields, focusing on sales growth and a wide remit of commercial responsibilities.

Karolina Matwiejew / Kielce-Poland

I have over 4 years' experience working within the "European fittings" industry. I have travelled extensively over Europe and have dealt with some of the largest distributors and manufacturers of exhaust, catalytic converters and turbochargers. I am the newest member of the Autogem Invicta Team and I am delighted to join a company with such a strong reputation in its field. Whether it be fittings, kits or turbocharger parts I look forward to working with you.

Hiten Nagar, London Distribution Facility

I have been with Autogem Invicta for almost all my professional life, starting over 15 years ago in 2000. I have grown within the company and seen it flourish. Since 2008 I am pleased to have become involved in a number of export markets and key accounts.

With an interest in automotive parts, as well as a background in systems and IT, I help co-ordinate not only my own export sales but often those of other members of our team. Based at our distribution headquarters in the UK, I look forward to assisting you whenever required.

Garen Post, US Product & Catalog Specialist

I have spent over 44 years in the automotive aftermarket in various management, sales, marketing and product devlopment positions. In 2005 I began to provide Autogem Invicta with OE research and catalog services. Product management for the US market is now a significant responsibility of mine.

I was aware of Autogem Invicta's strong presence in North America; but unaware of their commitment to product, inventory and service. Their tremendous growth and market penetration is a direct result of this commitment.

PART NUMBER INDEX

Part Number	Page(s)	Design Style
EGA001	165	1
EGA002	169	1
EGA003	174	1
EGA004	277	12
EGA010	275	12
EGA011	285	12
EGA014	181	1
EGA015	248	9
EGA017	249	9
EGA020	277	12
EGA021	173	1
EGA022	168	1
EGA023	177	1
EGA025	244	8
EGA026	174	1
EGA027	242	8
EGA028	166	1
EGA030	283	12
EGA036	246	9
EGA044	182	1
EGA045	168	1
EGA051	165	1
EGA054	186	1
EGA055	247	9
EGA056	187	1
EGA057	251	9
EGA059	241	8
EGA060	246	9
EGA062	242	8
EGA070	250	9
EGA076	217	6
EGA077	181	1
EGA078	309	18
EGA081	169	1
EGA083	284	12
EGA086	247	9
EGA087	250	9
EGA088	218	6
EGA089	218	6
EGA092	288	12
EGA094	295	12
EGA095	182	1
EGA096	195	3
EGA100	257	10
EGA101	247	9
EGA105	228	7
EGA106	225	7
EGA109	251	9
EGA110	249	9
EGA111	250	9
EGA112	217	6

Part Number	Page(s)	Design Style
EGA113	224	7
EGA114	229	7
EGA118	226	7
EGA119	221	7
EGA121	286	12
EGA124	194	3
EGA151	248	9
EGA152	201	5
EGA153	264	11
EGA154	276	12
EGA157	280	12
EGA158	201	5
EGA160	173	1
EGA161	230	7
EGA162	289	12
EGA166	218	6
EGA171	218	6
EGA172	219	6
EGA177	198	4
EGA181	165	1
EGA182	168	1
EGA183	227	7
EGA184	175	1
EGA185	163	1
EGA186	181	1
EGA187	185	1
EGA189	254	10
EGA191	260	10
EGA192	249	9
EGA193	167	1
EGA194	282	12
EGA196	320	19
EGA202	176	1
EGA203	318	19
EGA204	176	1
EGA205	263	11
EGA206	290	12
EGA207	238	7
EGA209	234	7
EGA213	252	9
EGA214	251	9
EGA216	177	1
EGA217	294	12
EGA218	273	12
EGA219	165	1
EGA225	247	9
EGA226	248	9
EGA229	283	12
EGA231	273	12
EGA235	220	7
EGA236	240	8

Part Number	Page(s)	Design Style
EGA239	198	4
EGA242	272	12
EGA243	266	11
EGA245	275	12
EGA247	292	12
EGA248	298	14
EGA249	223	7
EGA250	262	10
EGA251	291	12
EGA252	186	1
EGA253	306	16
EGA254	270	11
EGA255	206	5
EGA256	212	5
EGA257	173	1
EGA262	316	19
EGA266	179	1
EGA268	253	10
EGA269	199	4
EGA270	167	1
EGA271	335	19
EGA272	175	1
EGA274	266	11
EGA276	163	1
EGA277	192	2
EGA279	234	7
EGA280	259	10
EGA281	317	19
EGA283	315	19
EGA284	221	7
EGA285	228	7
EGA286	222	7
EGA287	214	5
EGA289	284	12
EGA290	324	19
EGA293	258	10
EGA294	233	7
EGA295	175	1
EGA296	226	7
EGA297	228	7
EGA299	289	12
EGA303	279	12
EGA304	310	18
EGA305	284	12
EGA308	318	19
EGA311	191	2
EGA313	233	7
EGA315	305	16
EGA316	189	1
EGA317	243	8
EGA318	249	9

Part Number	Page(s)	Design Style
EGA319	232	7
EGA320	194	3
EGA321	242	8
EGA322	220	7
EGA323	210	5
EGA324	251	9
EGA325	323	19
EGA326	266	11
EGA327	174	1
EGA328	205	5
EGA329	200	4
EGA330	244	8
EGA331	244	8
EGA332	200	4
EGA333	335	19
EGA334	193	2
EGA335	288	12
EGA336	192	2
EGA337	223	7
EGA338	211	5
EGA339	233	7
EGA340	269	11
EGA341	223	7
EGA341A	202	5
EGA342	254	10
EGA343	222	7
EGA344	178	1
EGA345	250	9
EGA346	193	2
EGA347	304	15
EGA348	202	5
EGA349	164	1
EGA350	191	2
EGA351	183	1
EGA352	212	5
EGA353	207	5
EGA356	206	5
EGA357	261	10
EGA358	245	8
EGA359	229	7
EGA360	221	7
EGA361	237	7
EGA362	221	7
EGA362A	201	5
EGA363	331	19
EGA364	332	19
EGA365	286	12
EGA366	287	12
EGA367	300	14
EGA368	167	1
EGA369	170	1

Part Number	Page(s)	Design Style
EGA370	172	1
EGA371	192	2
EGA372	279	12
EGA373	227	7
EGA374	246	9
EGA375	233	7
EGA376	331	19
EGA377	184	1
EGA378	206	5
EGA379	207	5
EGA380	203	5
EGA381	204	5
EGA382	203	5
EGA383	209	5
EGA384	319	19
EGA385	167	1
EGA386	166	1
EGA387	302	15
EGA388	293	12
EGA389	220	7
EGA390	225	7
EGA391	293	12
EGA392	216	5
EGA393	274	12
EGA394	199	4
EGA395	292	12
EGA396	297	13
EGA397	273	12
EGA398	281	12
EGA399	236	7
EGA400	222	7
EGA401	183	1
EGA402	330	19
EGA403	190	1
EGA405	331	19
EGA406	166	1
EGA407	312	19
EGA408	190	1
EGA409	267	11
EGA411	299	14
EGA412	280	12
EGA417	328	19
EGA418	295	12
EGA419	229	7
EGA420	188	1
EGA421	184	1
EGA422	303	15
EGA426	217	6
EGA429	317	19
EGA430	176	1
EGA431	188	1

Part Number	Page(s)	Design Style
EGA434	240	8
EGA435	281	12
EGA436	169	1
EGA437	336	19
EGA440	321	19
EGA441	256	10
EGA442	314	19
EGA443	283	12
EGA444	278	12
EGA445	276	12
EGA446	280	12
EGA449	311	19
EGA450	327	19
EGA451	330	19
EGA452	329	19
EGA470	211	5
EGA473	323	19
EGA474	189	1
EGA475	290	12
EGA476	185	1
EGA477	185	1
EGA478	258	10
EGA479	254	10
EGA480	257	10
EGA481	291	12
EGA482	274	12
EGA483	313	19
EGA484	285	12
EGA486	307	17
EGA487	213	5
EGA506	278	12
EGA509	205	5
EGA519	248	9
EGA520	194	3
EGA536	312	19
EGA553	246	9
EGA557	273	12
EGA573	264	11
EGA574	202	5
EGA576	201	5
EGA578	201	5
EGA579	271	11
EGA581	264	11
EGA584	203	5
EGA585	202	5
EGA586	272	12
EGA589	196	4
EGA593	274	12
EGA594	199	4
EGA597	169	1
EGA598	263	11

PART NUMBER INDEX

Part Number	Page(s)	Design Style
EGA599	282	12
EGA600	282	12
EGA601	267	11
EGA603	166	1
EGA612	205	5
EGA613	209	5
EGA615	203	5
EGA616	255	10
EGA618	246	9
EGA620	169	1
EGA621	163	1
EGA622	163	1
EGA624	164	1
EGA626	298	14
EGA630	196	4
EGA633	196	4
EGA635	170	1
EGA638	164	1
EGA646	315	19
EGA647	196	4
EGA648	196	4
EGA649	200	4
EGA656	253	10
EGA658	170	1
EGA659	197	4
EGA660	199	4
EGA661	262	10
EGA668	265	11
EGA674	241	8
EGA675	230	7
EGA684	168	1
EGA685	183	1
EGA687	220	7
EGA693	265	11
EGA694	171	1
EGA695	337	19
EGA700	202	5
EGA702	204	5
EGA705	168	1
EGA706	178	1
EGA713	247	9
EGA723	178	1
EGA731	182	1
EGA732	207	5
EGA733	195	3
EGA734	240	8
EGA735	244	8
EGA736	241	8
EGA737	221	7
EGA738	226	7
EGA739	240	8

Part Number	Page(s)	Design Style
EGA740	245	8
EGA741	243	8
EGA742	227	7
EGA743	226	7
EGA746	163	1
EGA748	320	19
EGA749	238	7
EGA750	246	9
EGA751	285	12
EGA752	278	12
EGA753	232	7
EGA756	275	12
EGA757	301	15
EGA758	197	4
EGA759	221	7
EGA760	170	1
EGA763	279	12
EGA767	241	8
EGA768	322	19
EGA770	172	1
EGA772	308	18
EGA779	268	11
EGA780	311	19
EGA781	268	11
EGA783	222	7
EGA785	296	13
EGA787	232	7
EGA791	220	7
EGA793	197	4
EGA795	172	1
EGA796	309	18
EGA797	299	14
EGA798	243	8
EGA799	271	11
EGA800	223	7
EGA802	163	1
EGA805	301	15
EGA807	230	7
EGA809	296	13
EGA811	173	1
EGA812	314	19
EGA814	336	19
EGA818	260	10
EGA820	296	13
EGA821	253	10
EGA825	274	12
EGA826	196	4
EGA830	265	11
EGA831	208	5
EGA832	210	5
EGA834	272	12

Part Number	Page(s)	Design Style
EGA835	222	7
EGA838	308	18
EGA839	308	18
EGA840	247	9
EGA841	242	8
EGA842	333	19
EGA843	225	7
EGA845	297	13
EGA846	179	1
EGA847	235	7
EGA848	228	7
EGA849	261	10
EGA851	332	19
EGA852	237	7
EGA854	180	1
EGA855	171	1
EGA856	176	1
EGA857	188	1
EGA858	178	1
EGA859	180	1
EGA860	255	10
EGA861	311	19
EGA862	296	13
EGA863	264	11
EGA864	307	17
EGA866	187	1
EGA867	177	1
EGA868	229	7
EGA869	229	7
EGA870	224	7
EGA872	171	1
EGA873	316	19
EGA875	298	14
EGA878	164	1
EGA880	165	1
EGA881	263	11
EGA882	172	1
EGA883	171	1
EGA884	272	12
EGA886	175	1
EGA887	224	7
EGA889	163	1
EGA890	217	6
EGA891	310	18
EGA893	326	19
EGA895	269	11
EGA896	311	19
EGA897	267	11
EGA899	234	7
EGA900	184	1
EGA901	297	13

PART NUMBER INDEX

Part Number	Page(s)	Design Style
EGA903	177	1
EGA905	333	19
EGA906	313	19
EGA907	198	4
EGA908	312	19
EGA909	197	4
EGA910	245	8
EGA911	268	11
EGA912	186	1
EGA914	277	12
EGA915	319	19
EGA916	231	7
EGA917	239	7
EGA918	235	7
EGA919	275	12
EGA920	206	5
EGA921	298	14
EGA922	181	1
EGA923	204	5
EGA925	179	1
EGA931	205	5
EGA936	180	1
EGA940	334	19
EGA941	167	1
EGA945	255	10
EGA951	259	10
EGA958	325	19
EGA959	311	19
EGA961	198	4
EGA963	224	7
EGA964	204	5
EGA968	230	7
EGA969	202	5
EGA970	232	7
EGA971	215	5
EGA972	236	7
EGA975	220	7
EGA976	243	8
EGA980	227	7
EGA981	197	4
EGA982	203	5
EGA983	201	5
EGA985	231	7
EGA986	239	7
EGA988	187	1
EGA989	256	10
EGA991	197	4
EGA992	174	1
EGA993	225	7
EGA995	208	5
EGA996	187	1

Part Number	Page(s)	Design Style
EGA997	276	12
EGA998	263	11
MG400	12, 29, 87	
MG410	154	
MG414	13, 130, 150	
MG415	13, 129, 130, 132, 149, 150	
MG416	13, 129, 133, 149	
MG420	14, 130, 133, 151	
MG421	14, 131, 151	
MG422	14, 33, 131, 134, 151	
MG423	15, 131, 134, 152	
MG424	102	
MG425	18	
MG426	19	
MG428	18	
MG429	18	
MG431	19	
MG432	22	
MG433	19	
MG434	20, 76	
MG436	20	
MG437	20	
MG438	27	
MG441	22, 77, 104	
MG442	23, 77, 104	
MG444	25, 78	
MG445	25, 78, 105	
MG446	78	
MG447	23	
MG448	21, 76	
MG450	27, 47	
MG464	33, 93, 137, 157	
MG465	34	
MG466	34	
MG467	34	
MG468	35, 94	
MG480	42, 46	
MG481	42	
MG482	43	
MG483	39	
MG484	39, 99	
MG485	39	
MG486	40	
MG487	43	
MG488	43	
MG489	35	
MG490	44	
MG491	35	
MG492	44	
MG493	44	
MG494	46	

Part Number	Page(s)	Design Style
MG495	45	
MG497	45	
MG498	36, 94	
MG501	47	
MG503	40	
MG504	36	
MG540	29	
MG541	12, 30, 87	
MG542	30, 116	
MG543	30, 87	
MG544	31	
MG545	31, 88	
MG546	31, 88	
MG590	64, 88	
MG591	64	
MG592	64, 89	
MG593	10, 65	
MG594	10	
MG595	65	
MG596	11	
MG597	10, 65	
MG600	66	
MG603	11, 67	
MG604	66	
MG605	11	
MG606	12	
MG607	66	
MG608	67	
MG610	70, 84	
MG611	67, 80	
MG612	68, 80	
MG613	68, 81	
MG614	68, 81	
MG618	69	
MG619	70, 84	
MG620	71, 84	
MG621	71, 85	
MG623	71, 85	
MG624	72, 85	
MG625	69	
MG626	69, 81	
MG627	72, 86	
MG628	70, 82	
MG629	72, 86	
MG635	82	
MG636	82	
MG637	86, 89	
MG638	83, 94	
MG640	83	
MG643	83	
MG650	95	

PART NUMBER INDEX

Part Number	Page(s)	Design Style
MG651	40, 76, 95	
MG652	41, 95	
MG653	96	
MG654	36, 96	
MG655	37, 96	
MG656	41, 99	
MG660	41, 100	
MG661	37, 97	
MG662	37, 97	
MG663	42, 90, 100	
MG664	32, 38, 97, 102, 117	
MG668	98	
MG669	98	
MG670	99	
MG675	100	
MG676	27, 101, 152	
MG677	101	
MG682	101	
MG683	123	
MG684	135	
MG700	23, 104	
MG702	21, 102	
MG703	21, 103, 158	
MG705	24, 105	
MG710	103	
MG720	105	
MG721	106	
MG722	106	
MG723	74	
MG724	73	
MG725	73, 107	
MG727	107	
MG728	74	
MG729	74, 108	
MG730	73, 108	
MG731	106	
MG750	47, 135	
MG751	48	
MG752	109	
MG753	109	
MG754	108	
MG755	109	
MG756	28, 110	
MG757	110	
MG758	60	
MG759	110	
MG760	111	
MG761	111	
MG762	111	
MG763	112	
MG764	112	

Part Number	Page(s)	Design Style
MG765	112	
MG767	48, 113	
MG768	113	
MG769	48, 113	
MG771	28, 114	
MG776	56, 115, 127	
MG780	117	
MG781	32, 117, 123	
MG782	118	
MG783	32, 38, 118, 136, 158	
MG784	118	
MG785	28, 119, 137	
MG787	119	
MG788	119	
MG792	49, 114	
MG810	107, 120	
MG811	158	
MG812	120	
MG813	121	
MG814	121	
MG815	121	
MG816	122	
MG817	122	
MG818	122	
MG820	114, 123	
MG840	89	
MG850	115, 124	
MG851	49, 115, 124	
MG852	124	
MG880	33, 136	
MG881	49, 136	
MG890	138	
MG891	145	
MG892	144	
MG893	138, 152	
MG894	50, 138	
MG895	139	
MG896	139	
MG897	139	
MG898	140	
MG900	140	
MG901	140	
MG902	141	
MG903	145	
MG905	146	
MG906	146	
MG907	50, 141	
MG908	148	
MG909	92	
MG911	92	
MG912	92, 148	

Part Number	Page(s)	Design Style
MG913	91	
MG914	91, 146	
MG915	147	
MG916	90, 144	
MG918	141	
MG919	142	
MG920	142	
MG921	142	
MG922	143	
MG923	90, 145	
MG925	143	
MG926	29, 143	
MG929	93, 148	
MG950	129, 133, 150	
MG951	153	
MG953	15, 132, 134, 153	
MG955	17, 156	
MG966	15, 153	
MG967	16, 155, 159	
MG969	16, 154	
MG970	16, 120, 132, 135, 155	
MG971	17, 157	
MG972	157	
MG974	17, 155	
MG975	154	
MG986	156	
MG1001	22, 77, 103	
MG1002	125	
MG1005	147	
MG1006	56, 137	
MG1008	91, 147	
MG1201	57, 116, 125	
MG1202	126	
MG1203	126	
MG1204	50	
MG1205	60	
MG1206	61	
MG1207	57	
MG1208	61	
MG1210	61	
MG1211	62	
MG1212	55, 75	
MG1213	51, 75	
MG1214	51	
MG1216	62	
MG1217	51	
MG1220	57	
MG1221	58	
MG1222	52	
MG1223	52	
MG1230	52, 126	

Part Number	Page(s)	Design Style
MG1232	62	
MG1233	58, 127	
MG1234	58	
MG1235	59, 128	
MG1239	59, 128	
MG1240	59, 128	
MG1241	63	
MG1242	56, 75	
MG1248	63	
MG1249	127	
MG1250	53	
MG1251	53	
MG1252	53	
MG1253	54	
MG1254	54	
MG1255	63	
MG1256	54	
MG1257	60, 116, 125	
MG1259	55, 144	
MG1260	55	
MG4301	24, 156	
MG4302	25,79	
MG4303	26, 79	
MG4304	26, 79	
MG4305	26, 80	
MG4306	98	
MG4307	24	
MG4601	45	
MG4602	38	
MG4603	46	
MG8993	93, 149	

ACURA

MG593 — L4 Cylinder

OEM

18115-PNE-004
18115-PRB-A01
18115-PNE-004

Bolt Holes

5

Interchanges

Fel Pro:	MS96474
Mahle US:	MS19282
Victor Reinz:	71-53802-00
Glaser:	X82311-01
Elring-Klinger:	270.36

Notes:

ACURA

MG597 — L4 Cylinder

OEM

18115-P0A-003
18115-P0A-004

Bolt Holes

8

Interchanges

Fel Pro:	MS94184
Mahle US:	MS16163
Victor Reinz:	71-53763-00
Glaser:	X82306-01
Elring-Klinger:	

Notes:

ACURA

MG594 — L5 Cylinder

OEM

18115-PV3-003
18115-PV0-003

Bolt Holes

11

Interchanges

Fel Pro:	MS97049
Mahle US:	
Victor Reinz:	
Glaser:	
Elring-Klinger:	

Notes:

ACURA

MG596 — V6 Cylinder

OEM

18115-PY3-003

18115-PY3-004

Bolt Holes

11

Interchanges

Fel Pro:	MS95682
Mahle US:	MS16071
Victor Reinz:	
Glaser:	
Elring-Klinger:	

Notes:

ACURA

MG603 — V6 Cylinder

OEM

18115-P8E-A01

Bolt Holes

5

Interchanges

Fel Pro:	MS96166
Mahle US:	MS17814
Victor Reinz:	
Glaser:	
Elring-Klinger:	

Notes:

ACURA

MG605 — V6 Cylinder

OEM

18115-PR7-A02

18115-PR7-A01

Bolt Holes

7

Interchanges

Fel Pro:	
Mahle US:	MS19319
Victor Reinz:	
Glaser:	
Elring-Klinger:	

Notes:

ACURA

MG606 — V6 Cylinder

OEM

18115-PBY-J02

18115-PBY-J01

Bolt Holes

7

Interchanges

Fel Pro:

Mahle US:

Victor Reinz:

Glaser:

Elring-Klinger:

Notes:

ALFA ROMEO

MG400 — L4 Cylinder

OEM

73 502 761

55194028

60611531

608127290

Bolt Holes

8

Interchanges

Fel Pro:	
Mahle US:	
Victor Reinz:	71-35658-00
Glaser:	X51965-01
Elring-Klinger:	448.51

Notes:

ALFA ROMEO

MG541 — L4 Cylinder

OEM

46526271

Bolt Holes

9

Interchanges

Fel Pro:	
Mahle US:	
Victor Reinz:	71-35702-00
Glaser:	X52653-01
Elring-Klinger:	329.26

Notes:

AUDI

MG416 — L3 Cylinder

OEM

045 253 039

Bolt Holes

6

Interchanges

Fel Pro:	
Mahle US:	
Victor Reinz:	71-34217-00
Glaser:	X52968-01
Elring-Klinger:	530.8

Notes:

AUDI

MG414 — L4 Cylinder

OEM

030 129 717D

Bolt Holes

8

Interchanges

Fel Pro:	
Mahle US:	
Victor Reinz:	71-26279-20
Glaser:	X03745-01
Elring-Klinger:	671.7

Notes: Intake Manifold Gasket

AUDI

MG415 — L4 Cylinder

OEM

058 253 306L

058 253 039G

Bolt Holes

13

Interchanges

Fel Pro:	MS96116
Mahle US:	MS19233
Victor Reinz:	71-31958-00
Glaser:	X51632-01
Elring-Klinger:	148.19

Notes:

AUDI

MG420 — L4 Cylinder

OEM

048 129 717D

Bolt Holes

6

Interchanges

Fel Pro:	
Mahle US:	
Victor Reinz:	71-31856-00
Glaser:	X86258-01
Elring-Klinger:	146.77

Notes: Intake Manifold Gasket

AUDI

MG421 — L4 Cylinder

OEM

030 253 039A

030 129 585B

030 129 585

Bolt Holes

3

Interchanges

Fel Pro:	
Mahle US:	
Victor Reinz:	71-27476-00
Glaser:	X51580-01
Elring-Klinger:	750.23

Notes: 2 Required

AUDI

MG422 — L4 Cylinder

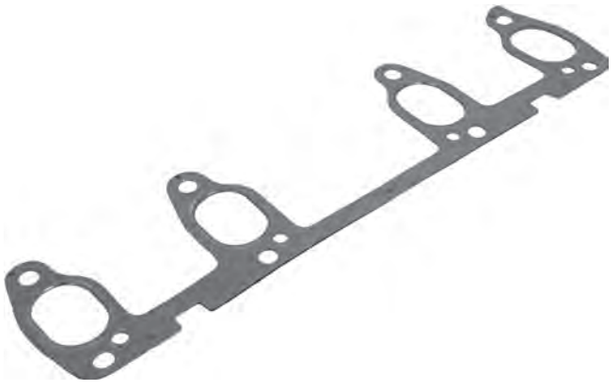

OEM

037 253 039D

037 253 039

Bolt Holes

12

Interchanges

Fel Pro:	MS97196
Mahle US:	MS18396
Victor Reinz:	71-31957-00
Glaser:	X51638-0
Elring-Klinger:	625.76

Notes:

AUDI

MG423 — L4 Cylinder

OEM

036 253 039F

036 253 039C

Bolt Holes

9

Interchanges

Fel Pro:	
Mahle US:	
Victor Reinz:	71-34206-00
Glaser:	X51579-01
Elring-Klinger:	135.23

Notes:

AUDI

MG953 — L4 Cylinder

OEM

06B 253 039E

Bolt Holes

12

Interchanges

Fel Pro:	
Mahle US:	
Victor Reinz:	71-34214-00
Glaser:	X81686-01
Elring-Klinger:	744.321

Notes:

AUDI

MG966 — L4 Cylinder

OEM

06F 253 039E

06F 253 039F

Bolt Holes

8

Interchanges

Fel Pro:	MS96784
Mahle US:	MS19407
Victor Reinz:	71-37511-00
Glaser:	X81829-01
Elring-Klinger:	

Notes:

AUDI

MG967 — L4 Cylinder

OEM

028 129 589B

026 129 589A

Bolt Holes

2

Interchanges

Fel Pro:	MS94063
Mahle US:	MS19396
Victor Reinz:	71-27898-20
Glaser:	X03747-01
Elring-Klinger:	815.187

Notes: 4 Required

AUDI

MG969 — L4 Cylinder

OEM

03L 253 039B

03G 253 039

Bolt Holes

8

Interchanges

Fel Pro:	
Mahle US:	
Victor Reinz:	71-38428-00
Glaser:	X81685-01
Elring-Klinger:	477.64

Notes:

AUDI

MG970 — V6 Cylinder

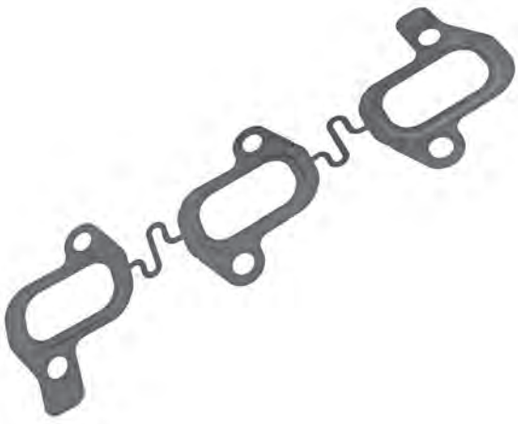

OEM

059 253 039D

Bolt Holes

6

Interchanges

Fel Pro:	
Mahle US:	
Victor Reinz:	71-36117-00
Glaser:	X81941-01
Elring-Klinger:	148.271

Notes: 2 Required

AUDI

MG974 — V6 Cylinder

OEM

03H 253 039E

Bolt Holes

6

Interchanges

Fel Pro:	
Mahle US:	
Victor Reinz:	71-37501-00
Glaser:	X81832-01
Elring-Klinger:	

Notes:

AUDI

MG955 — V8 Cylinder

OEM

077 253 039C

Bolt Holes

12

Interchanges

Fel Pro:	
Mahle US:	MS19568
Victor Reinz:	71-34094-00
Glaser:	X52312-01
Elring-Klinger:	530.93

Notes:

AUDI

MG971 — W12 Cylinder

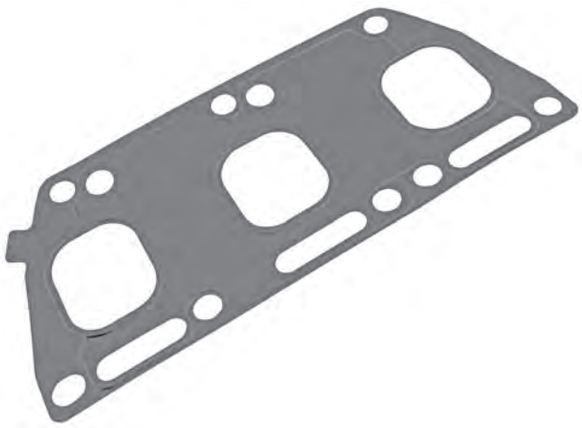

OEM

07C 253 039D

Bolt Holes

10

Interchanges

Fel Pro:	MS97197
Mahle US:	MS19877
Victor Reinz:	71-36107-00
Glaser:	X81983-01
Elring-Klinger:	710.802

Notes:

BMW

MG425 — L4 Cylinder

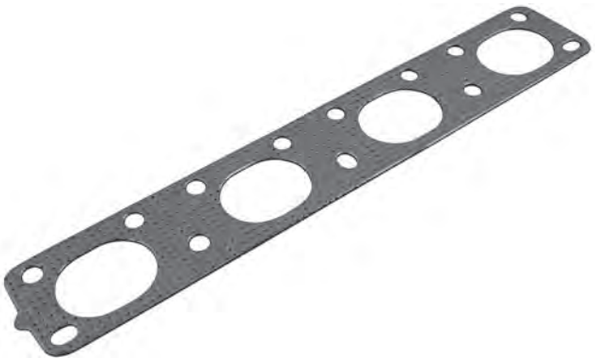

OEM

18 40 750 67 78

Bolt Holes

13

Interchanges

Fel Pro:	
Mahle US:	
Victor Reinz:	71-37278-10
Glaser:	X82039-01
Elring-Klinger:	438.71

Notes:

BMW

MG428 — L4 Cylinder

OEM

11 62 7 798 177

Bolt Holes

9

Interchanges

Fel Pro:	
Mahle US:	
Victor Reinz:	71-37403-00
Glaser:	X82042-01
Elring-Klinger:	171.48

Notes: 2 Required

BMW

MG429 — L4 Cylinder

OEM

18 30 754 07 97

Bolt Holes

13

Interchanges

Fel Pro:	
Mahle US:	
Victor Reinz:	71-37286-00
Glaser:	X82343-01
Elring-Klinger:	438.82

Notes:

BMW

MG426 — L6 Cylinder

OEM

11 62 1732 969

Bolt Holes

8

Interchanges

Fel Pro:	MS96521
Mahle US:	MS19252
Victor Reinz:	71-34834-00
Glaser:	X52315-01
Elring-Klinger:	326.25

Notes:

CHRYSLER PRODUCTS

MG431 — L4 Cylinder

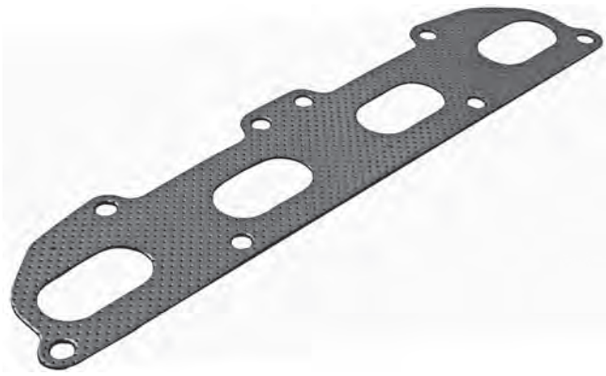

OEM

4621 833

4667 722

Bolt Holes

8

Interchanges

Fel Pro:	MS95692
Mahle US:	MS12448
Victor Reinz:	
Glaser:	
Elring-Klinger:	

Notes:

CHRYSLER PRODUCTS

MG433 — L4 Cylinder

OEM

4667 492

Bolt Holes

8

Interchanges

Fel Pro:	MS95674
Mahle US:	MS16184
Victor Reinz:	
Glaser:	
Elring-Klinger:	

Notes:

CHRYSLER PRODUCTS

MG434 — L4 Cylinder

OEM

4693 346AB

Bolt Holes

8

Interchanges

Fel Pro:	MS96961
Mahle US:	MS19563
Victor Reinz:	
Glaser:	
Elring-Klinger:	

Notes:

CHRYSLER PRODUCTS

MG436 — L4 Cylinder

OEM

4884 089AB

4884 089AA

Bolt Holes

8

Interchanges

Fel Pro:	MS96172
Mahle US:	MS19287
Victor Reinz:	
Glaser:	
Elring-Klinger:	

Notes:

CHRYSLER PRODUCTS

MG437 — L4 Cylinder

OEM

4884 447AA

Bolt Holes

10

Interchanges

Fel Pro:	MS19477
Mahle US:	MS92846
Victor Reinz:	
Glaser:	
Elring-Klinger:	

Notes:

CHRYSLER PRODUCTS

MG448 — L4 Cylinder

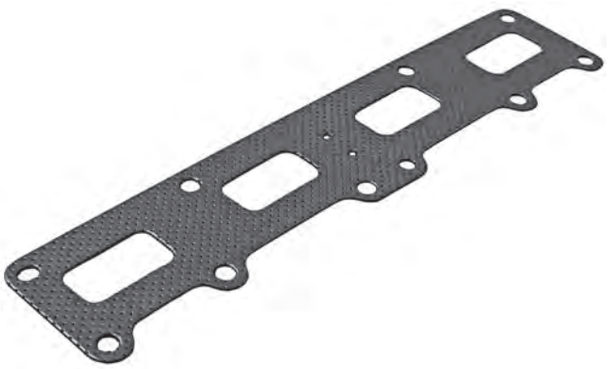

OEM

4781 255AA

Bolt Holes

10

Interchanges

Fel Pro:	MS92846
Mahle US:	MS19245
Victor Reinz:	
Glaser:	
Elring-Klinger:	

Notes:

CHRYSLER PRODUCTS

MG702 — L4 Cylinder

OEM

1555A052

MN137217

Bolt Holes

5

Interchanges

Fel Pro:	MS96420
Mahle US:	MS19376
Victor Reinz:	
Glaser:	
Elring-Klinger:	

Notes:

CHRYSLER PRODUCTS

MG703 — L4 Cylinder

OEM

MR323599

MR497557

Bolt Holes

9

Interchanges

Fel Pro:	MS95314	
Mahle US:	MS16278	
Victor Reinz:	71-53161-00	71-52908-00
Glaser:	X82253-01	X82224-01
Elring-Klinger:	34.62	

Notes:

CHRYSLER PRODUCTS

MG1001 — L4 Cylinder

OEM

1555 A185

Bolt Holes

10

Interchanges

Fel Pro:	MS96902
Mahle US:	MS19562
Victor Reinz:	71-54096-00
Glaser:	X59463-01
Elring-Klinger:	

Notes:

CHRYSLER PRODUCTS

MG432 — V6 Cylinder

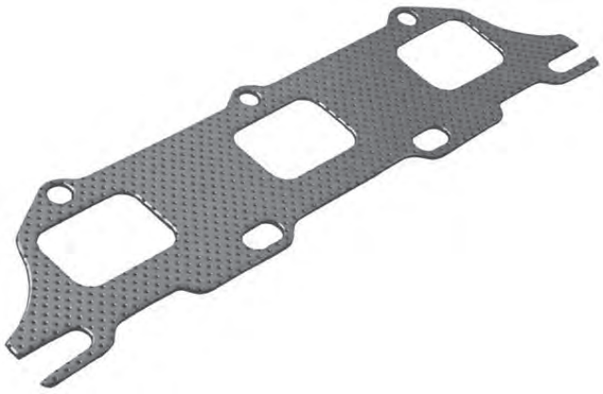

OEM

4663992

Bolt Holes

7

Interchanges

Fel Pro:	MS91483
Mahle US:	MS16237
Victor Reinz:	
Glaser:	
Elring-Klinger:	

Notes:

CHRYSLER PRODUCTS

MG441 — V6 Cylinder

OEM

53013 932AB

53013 932AA

Bolt Holes

8

Interchanges

Fel Pro:	MS96344
Mahle US:	MS16349
Victor Reinz:	
Glaser:	
Elring-Klinger:	

Notes:

CHRYSLER PRODUCTS

MG442 — V6 Cylinder

OEM

5301 3933AB
5303 3933AA

Bolt Holes

8

Interchanges

Fel Pro:	MS96344	MS96344-1
Mahle US:	MS16349	
Victor Reinz:		
Glaser:		
Elring-Klinger:		

Notes:

CHRYSLER PRODUCTS

MG447 — V6 Cylinder

OEM

4663958

Bolt Holes

6

Interchanges

Fel Pro:	MS95446
Mahle US:	MS16138
Victor Reinz:	
Glaser:	
Elring-Klinger:	

Notes:

CHRYSLER PRODUCTS

MG700 — V6 Cylinder

OEM

MR281721
5159 013AA
MD184751

Bolt Holes

7

Interchanges

Fel Pro:	MS95711
Mahle US:	MS16267
Victor Reinz:	
Glaser:	
Elring-Klinger:	

Notes:

CHRYSLER PRODUCTS

MG705 — V6 Cylinder

OEM

MR266545

MN135895

Bolt Holes

7

Interchanges

Fel Pro:	MS95711
Mahle US:	MS16280
Victor Reinz:	
Glaser:	
Elring-Klinger:	

Notes:

CHRYSLER PRODUCTS

MG4301 — V6 Cylinder

OEM

5184 214AE

68093232AA

Bolt Holes

5

Interchanges

Fel Pro:	MS97197
Mahle US:	MS19877
Victor Reinz:	71-10413-00
Glaser:	X90058-01
Elring-Klinger:	

Notes:

CHRYSLER PRODUCTS

MG4307 — V6 Cylinder

OEM

4648913AA

Bolt Holes

6

Interchanges

Fel Pro:	MS95446
Mahle US:	MS16138
Victor Reinz:	
Glaser:	
Elring-Klinger:	

Notes:

CHRYSLER PRODUCTS

MG444 — V8 Cylinder

OEM

5301 3944AA

Bolt Holes

11

Interchanges

Fel Pro:	MS96905
Mahle US:	MS19529
Victor Reinz:	
Glaser:	
Elring-Klinger:	

Notes:

CHRYSLER PRODUCTS

MG445 — V8 Cylinder

OEM

5303 4029AD

5303 0813

Bolt Holes

11

Interchanges

Fel Pro:	MS93217
Mahle US:	MS16336
Victor Reinz:	
Glaser:	
Elring-Klinger:	

Notes:

CHRYSLER PRODUCTS

MG4302 — V8 Cylinder

OEM

5045 495AA

53032 965AF

Bolt Holes

13

Interchanges

Fel Pro:	
Mahle US:	
Victor Reinz:	
Glaser:	
Elring-Klinger:	

Notes:

CHRYSLER PRODUCTS

MG4303 — V8 Cylinder

OEM

5045 496AA

53032 966AF

Bolt Holes

14

Interchanges

Fel Pro:	
Mahle US:	
Victor Reinz:	
Glaser:	
Elring-Klinger:	

Notes:

CHRYSLER PRODUCTS

MG4304 — V8 Cylinder

OEM

5303 2832AH

Bolt Holes

11

Interchanges

Fel Pro:	MS96994
Mahle US:	MS19508
Victor Reinz:	
Glaser:	
Elring-Klinger:	

Notes:

CHRYSLER PRODUCTS

MG4305 — V8 Cylinder

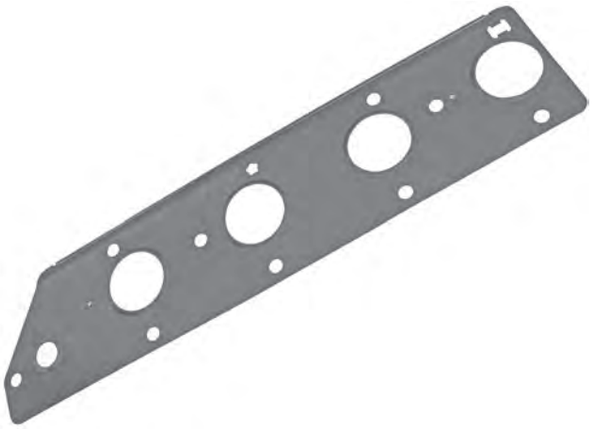

OEM

5303 2833AH

Bolt Holes

12

Interchanges

Fel Pro:	MS96994
Mahle US:	MS19508
Victor Reinz:	
Glaser:	
Elring-Klinger:	

Notes:

CHRYSLER PRODUCTS

MG438 — V10 Cylinder

OEM

4848 339AB
4848 339AB

Bolt Holes

10

Interchanges

Fel Pro:	
Mahle US:	
Victor Reinz:	
Glaser:	
Elring-Klinger:	

Notes:

DAEWOO

MG450 — L4 Cylinder

OEM

96378805
86350469

Bolt Holes

10

Interchanges

Fel Pro:	MS96942
Mahle US:	MS19331
Victor Reinz:	71-533914-00
Glaser:	X82265-01
Elring-Klinger:	165.59

Notes:

DAEWOO

MG676 — L4 Cylinder

OEM

1111420580

Bolt Holes

13

Interchanges

Fel Pro:	
Mahle US:	
Victor Reinz:	71-33174-00
Glaser:	X51359-01
Elring-Klinger:	921.408

Notes:

DAEWOO

MG756 — L4 Cylinder

OEM

92060515
90106615
90409645

Bolt Holes

8

Interchanges

Fel Pro:	
Mahle US:	
Victor Reinz:	
Glaser:	
Elring-Klinger:	

Notes:

DAEWOO

MG771 — L4 Cylinder

OEM

90411887

Bolt Holes

14

Interchanges

Fel Pro:	
Mahle US:	
Victor Reinz:	71-31971-00
Glaser:	X51630-01
Elring-Klinger:	834-793

Notes:

DAIHATSU

MG785 — L4 Cylinder

OEM

17173-40020

Bolt Holes

4

Interchanges

Fel Pro:	
Mahle US:	
Victor Reinz:	71-53506-00
Glaser:	X81894-01
Elring-Klinger:	291-540

Notes:

DAIHATSU

MG926 — L4 Cylinder

OEM

17173-23010

Bolt Holes

5

Interchanges

Fel Pro:	
Mahle US:	
Victor Reinz:	71-53112-00
Glaser:	X92244-01
Elring-Klinger:	458.69

Notes:

FIAT

MG400 — L4 Cylinder

OEM

73 502 761

55194028

60611531

608127290

Bolt Holes

8

Interchanges

Fel Pro:	
Mahle US:	
Victor Reinz:	71-35658-00
Glaser:	X51965-01
Elring-Klinger:	448.51

Notes:

FIAT

MG540 — L4 Cylinder

OEM

46404428

7749711

55197682

55199355

Bolt Holes

8

Interchanges

Fel Pro:	
Mahle US:	
Victor Reinz:	71-35617-00
Glaser:	X51429-01
Elring-Klinger:	375.07

Notes: Can Replace 2 Piece Design

FIAT

MG541 — L4 Cylinder

OEM

46526271

Bolt Holes

9

Interchanges

Fel Pro:	
Mahle US:	
Victor Reinz:	71-35702-00
Glaser:	X52653-01
Elring-Klinger:	329.26

Notes:

FIAT

MG542 — L4 Cylinder

OEM

7772495

Bolt Holes

8

Interchanges

Fel Pro:	
Mahle US:	
Victor Reinz:	71-35716-00
Glaser:	X00667-01
Elring-Klinger:	435.372

Notes: Intake & Exhaust Gasket

FIAT

MG543 — L4 Cylinder

OEM

46820225

46412116

Bolt Holes

10

Interchanges

Fel Pro:	
Mahle US:	
Victor Reinz:	71-35652-00
Glaser:	X51964-01
Elring-Klinger:	332.21

Notes:

FIAT

MG544 — L4 Cylinder

OEM

60659747
60815806
60811349
60659952

Bolt Holes

14

Interchanges

Fel Pro:	
Mahle US:	
Victor Reinz:	71-35657-00
Glaser:	X58336-01
Elring-Klinger:	685.45

Notes: Intake Manifold Gasket

FIAT

MG545 — L4 Cylinder

OEM

46754320

Bolt Holes

8

Interchanges

Fel Pro:	
Mahle US:	
Victor Reinz:	71-35639-00
Glaser:	X51143-01
Elring-Klinger:	375.16

Notes: Intake Manifold Gasket

FIAT

MG546 — L4 Cylinder

OEM

46757609
46425908

Bolt Holes

9

Interchanges

Fel Pro:	
Mahle US:	
Victor Reinz:	71-35619-00
Glaser:	X52230-01
Elring-Klinger:	725.79

Notes:

FIAT

MG664 — L4 Cylinder

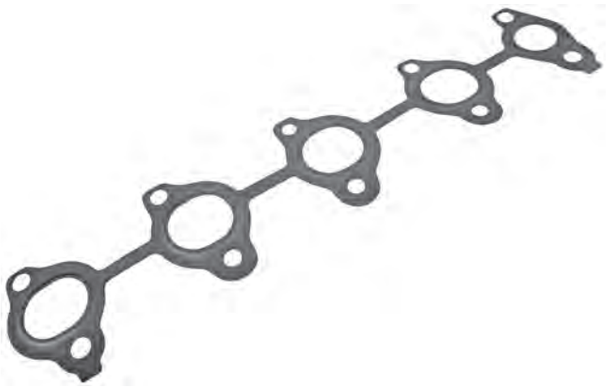

OEM

9467616689

Bolt Holes

5

Interchanges

Fel Pro:	
Mahle US:	
Victor Reinz:	71-36553-10
Glaser:	X87773-01
Elring-Klinger:	337.81

Notes:

FIAT

MG781 — L4 Cylinder

OEM

9567224080

Bolt Holes

13

Interchanges

Fel Pro:	
Mahle US:	
Victor Reinz:	71-33683-00
Glaser:	X51239-01
Elring-Klinger:	919.829

Notes: Intake & Exhaust Gasket

FIAT

MG783 — L4 Cylinder

OEM

9400349129

Bolt Holes

9

Interchanges

Fel Pro:	
Mahle US:	
Victor Reinz:	71-33223-00
Glaser:	X81070-01
Elring-Klinger:	156.77

Notes: Intake & Exhaust Gasket

FIAT

MG880 — L4 Cylinder

OEM

71742079

Bolt Holes

15

Interchanges

Fel Pro:	
Mahle US:	MS19789
Victor Reinz:	71-53697-00
Glaser:	X81988-01
Elring-Klinger:	198.72

Notes:

FORD

MG422 — L4 Cylinder

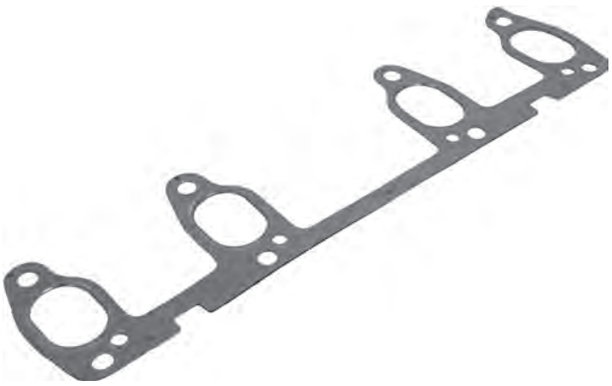

OEM

1 117 176

Bolt Holes

12

Interchanges

Fel Pro:	MS94063
Mahle US:	MS18396
Victor Reinz:	71-31957-00
Glaser:	X51638-0
Elring-Klinger:	625.76

Notes:

FORD

MG464 — L4 Cylinder

OEM

1 326 381

2S6G9448DA

Bolt Holes

5

Interchanges

Fel Pro:	
Mahle US:	
Victor Reinz:	71-36553-10
Glaser:	X87773-01
Elring-Klinger:	337.81

Notes:

FORD

MG465 — L4 Cylinder

OEM

91SM9448AB

6 591 016

Bolt Holes

8

Interchanges

Fel Pro:	
Mahle US:	
Victor Reinz:	71-27332-10
Glaser:	X02154-01
Elring-Klinger:	705.811

Notes:

FORD

MG466 — L4 Cylinder

OEM

6 591 017

1 073 056

1 606 629

91SM 9448BB

Bolt Holes

8

Interchanges

Fel Pro:	
Mahle US:	
Victor Reinz:	71-25316-30
Glaser:	X01668-01
Elring-Klinger:	318.974

Notes:

FORD

MG467 — L4 Cylinder

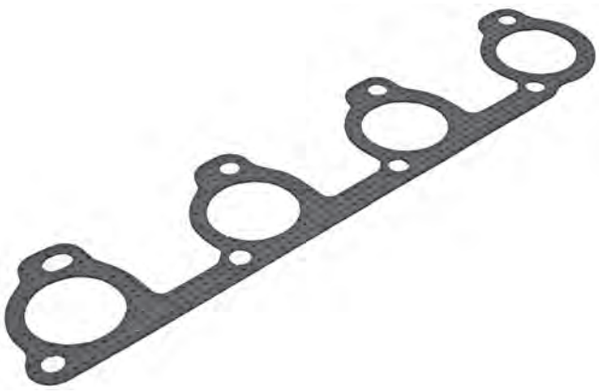

OEM

1 127 417

Bolt Holes

8

Interchanges

Fel Pro:	
Mahle US:	
Victor Reinz:	71-35491-00
Glaser:	X81695-01
Elring-Klinger:	24.95

Notes:

FORD

MG468 — L4 Cylinder

OEM

89FF9448CA
6 740 296

Bolt Holes

8

Interchanges

Fel Pro:	
Mahle US:	
Victor Reinz:	71-31527-00
Glaser:	X51175-01
Elring-Klinger:	128.161

Notes:

FORD

MG489 — L4 Cylinder

OEM

7S4Z 9448A

Bolt Holes

9

Interchanges

Fel Pro:	MS96892
Mahle US:	MS19583
Victor Reinz:	
Glaser:	
Elring-Klinger:	

Notes:

FORD

MG491 — L4 Cylinder

OEM

3S4Z 9448AA

Bolt Holes

7

Interchanges

Fel Pro:	MS96663
Mahle US:	MS19365
Victor Reinz:	
Glaser:	
Elring-Klinger:	

Notes:

FORD

MG498 — L4 Cylinder

OEM

9E5E 9448CA
9E5Z 9448A
7L8Z9448A

Bolt Holes

7

Interchanges

Fel Pro:	MS96901
Mahle US:	MS19655
Victor Reinz:	
Glaser:	
Elring-Klinger:	

Notes:

FORD

MG504 — L4 Cylinder

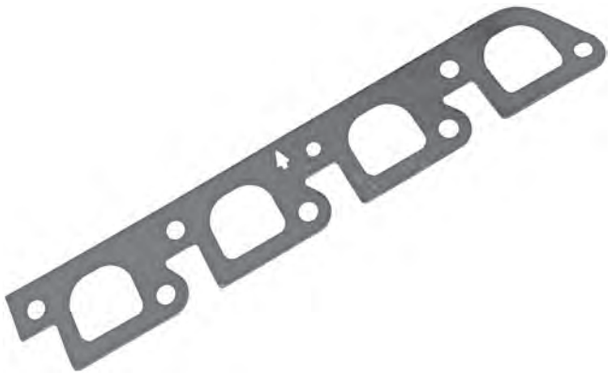

OEM

F6CE 9448AC
F6CZ 9448AC

Bolt Holes

8

Interchanges

Fel Pro:	MS92057
Mahle US:	MS15249
Victor Reinz:	
Glaser:	
Elring-Klinger:	

Notes:

FORD

MG654 — L4 Cylinder

OEM

1L5Z 9448AA
1L5Z 9448BA

Bolt Holes

7

Interchanges

Fel Pro:	MS96655
Mahle US:	MS19365
Victor Reinz:	71-35488-00
Glaser:	X88193-01
Elring-Klinger:	24.39

Notes:

FORD

MG655 — L4 Cylinder

OEM

968Z 9448AA
968M 9448AA
1 053 902

Bolt Holes

9

Interchanges

Fel Pro:	MS94427
Mahle US:	MS19292
Victor Reinz:	71-34309-00
Glaser:	X91907-01
Elring-Klinger:	267.7

Notes:

FORD

MG661 — L4 Cylinder

OEM

F1CZ 9448-A

Bolt Holes

9

Interchanges

Fel Pro:	MS94611	
Mahle US:	MS15646	
Victor Reinz:	71-53516-00	71-52864-00
Glaser:	X82281-01	X82217-01
Elring-Klinger:		

Notes:

FORD

MG662 — L4 Cylinder

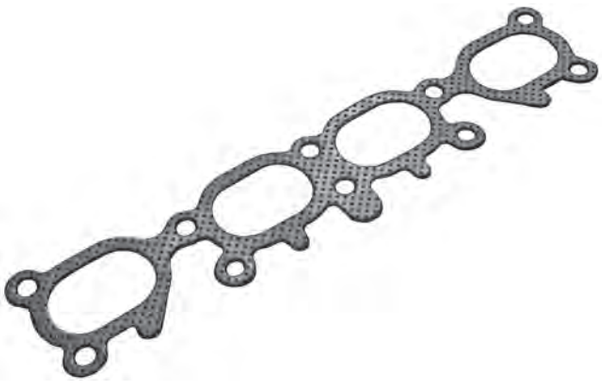

OEM

F32Z 9448A

Bolt Holes

10

Interchanges

Fel Pro:	MS95425
Mahle US:	MS16122
Victor Reinz:	71-52858-01
Glaser:	X82216-01
Elring-Klinger:	226.63

Notes:

FORD

MG664 — L4 Cylinder

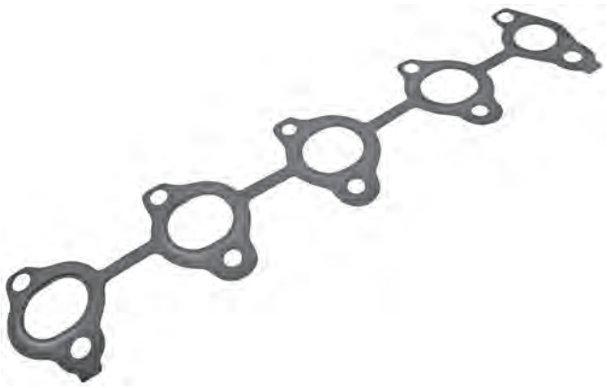

OEM

1 148 115

Bolt Holes

10

Interchanges

Fel Pro:	
Mahle US:	
Victor Reinz:	71-35487-00
Glaser:	X81696-01
Elring-Klinger:	761.041

Notes:

FORD

MG783 — L4 Cylinder

OEM

1 234 178

Bolt Holes

9

Interchanges

Fel Pro:	
Mahle US:	
Victor Reinz:	71-33223-00
Glaser:	X81070-01
Elring-Klinger:	156.77

Notes: Intake & Exhaust Gasket

FORD

MG4602 — L4 Cylinder

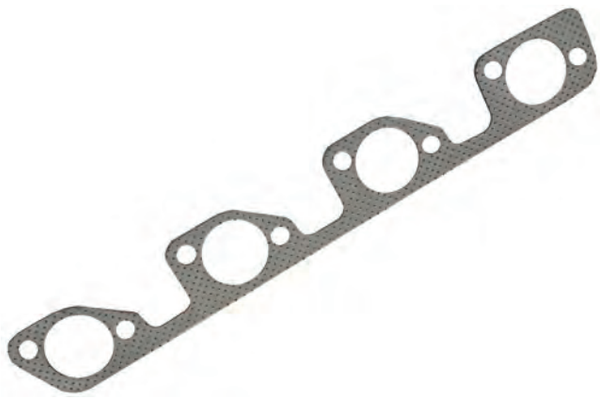

OEM

F37Z 9448A

Bolt Holes

8

Interchanges

Fel Pro:	MS94424
Mahle US:	MS16104
Victor Reinz:	
Glaser:	
Elring-Klinger:	

Notes:

FORD

MG483 — V6 Cylinder

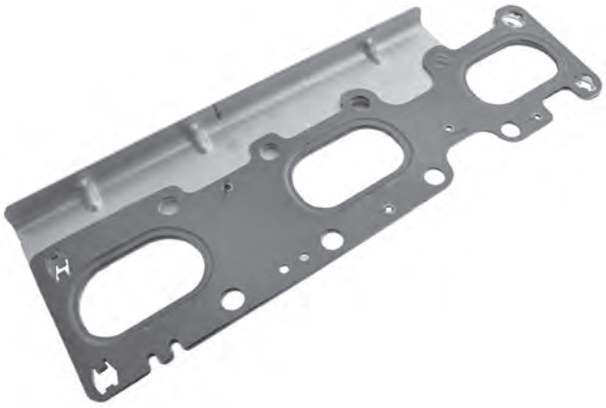

OEM

AT4Z 9448A
DG1Z 9448A

Bolt Holes

12

Interchanges

Fel Pro:	MS97217
Mahle US:	MS19555
Victor Reinz:	
Glaser:	
Elring-Klinger:	

Notes:

FORD

MG484 — V6 Cylinder

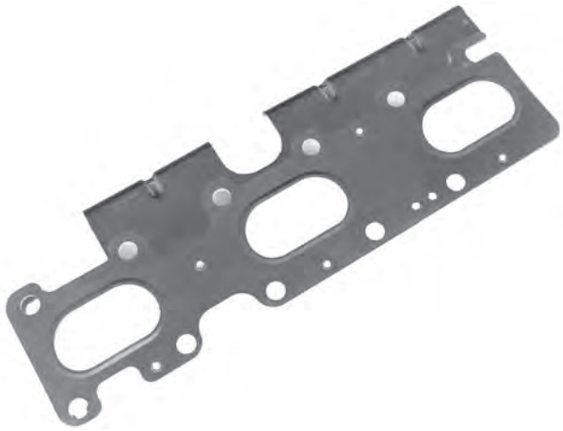

OEM

7T4Z 9448F
7T4Z 9448EA

Bolt Holes

11

Interchanges

Fel Pro:	MS97121
Mahle US:	MS19555
Victor Reinz:	71-54264-00
Glaser:	X59821-01
Elring-Klinger:	

Notes:

FORD

MG485 — V6 Cylinder

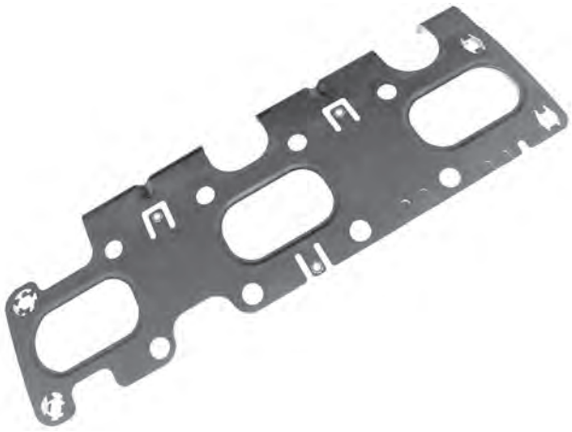

OEM

AA5Z 9448C

Bolt Holes

12

Interchanges

Fel Pro:	MS97218
Mahle US:	
Victor Reinz:	
Glaser:	
Elring-Klinger:	

Notes:

FORD

MG486 — V6 Cylinder

OEM

6L5Z 9448A

77DZ 9448BB

Bolt Holes

11

Interchanges

Fel Pro:	MS95939
Mahle US:	MS15426
Victor Reinz:	
Glaser:	
Elring-Klinger:	

Notes:

FORD

MG503 — V6 Cylinder

OEM

XR3Z 9448AA

Bolt Holes

6

Interchanges

Fel Pro:	MS95968
Mahle US:	MS16171
Victor Reinz:	
Glaser:	
Elring-Klinger:	

Notes:

FORD

MG651 — V6 Cylinder

OEM

XW4Z 9448AA

XW4Z9448AD

F5RZ9448A

36 56 963

Bolt Holes

6

Interchanges

Fel Pro:	MS95715	MS96899
Mahle US:	MS12415	
Victor Reinz:	71-34307-00	
Glaser:	X51629-01	
Elring-Klinger:	24.76	

Notes:

FORD

MG652 — V6 Cylinder

OEM

F32Z 9448B

Bolt Holes

7

Interchanges

Fel Pro:	MS95428
Mahle US:	MS12456
Victor Reinz:	
Glaser:	
Elring-Klinger:	

Notes:

FORD

MG656 — V6 Cylinder

OEM

F7DZ 9448BB

6L5Z 9448A

Bolt Holes

6

Interchanges

Fel Pro:	MS95939
Mahle US:	MS15426
Victor Reinz:	
Glaser:	
Elring-Klinger:	

Notes:

FORD

MG660 — V6 Cylinder

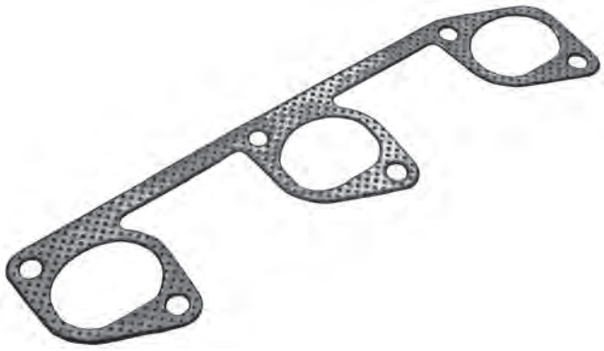

OEM

F87Z 9448-AA

Bolt Holes

6

Interchanges

Fel Pro:	MS95960
Mahle US:	MS16290
Victor Reinz:	
Glaser:	
Elring-Klinger:	

Notes:

FORD

MG663 — V6 Cylinder

OEM

4L2Z 9448CA
F77Z 9448BA

Bolt Holes

6

Interchanges

Fel Pro:	MS90779
Mahle US:	MS19204
Victor Reinz:	
Glaser:	
Elring-Klinger:	448-102

Notes:

FORD

MG480 — V8 Cylinder

OEM

YC2E 9431AD
YC2Z 9448A
YC2Z 9448CA

Bolt Holes

4

Interchanges

Fel Pro:	MS92568
Mahle US:	MS19535
Victor Reinz:	
Glaser:	
Elring-Klinger:	

Notes:

FORD

MG481 — V8 Cylinder

OEM

9L2Z 9448B
3L3Z 9448-A

Bolt Holes

9

Interchanges

Fel Pro:	MS96679
Mahle US:	MS19261
Victor Reinz:	
Glaser:	
Elring-Klinger:	

Notes:

FORD

MG482 — V8 Cylinder

OEM

9L3Z 9448A

Bolt Holes

6

Interchanges

Fel Pro:	MS96679
Mahle US:	MS19261
Victor Reinz:	
Glaser:	
Elring-Klinger:	

Notes:

FORD

MG487 — V8 Cylinder

OEM

2W9Z 9448AD

2W9Z 9448AE

Bolt Holes

8

Interchanges

Fel Pro:	MS96925
Mahle US:	MS19442
Victor Reinz:	
Glaser:	
Elring-Klinger:	

Notes:

FORD

MG488 — V8 Cylinder

OEM

2W9Z 9448CB

2W9Z 9448CC

Bolt Holes

8

Interchanges

Fel Pro:	MS96925
Mahle US:	MS19442
Victor Reinz:	
Glaser:	
Elring-Klinger:	

Notes:

FORD

MG490 — V8 Cylinder

OEM

4G7Z 9448AA

Bolt Holes

4

Interchanges

Fel Pro:	
Mahle US:	
Victor Reinz:	
Glaser:	
Elring-Klinger:	

Notes:

FORD

MG492 — V8 Cylinder

OEM

2C5Z 9448BA

Bolt Holes

4

Interchanges

Fel Pro:	MS95949
Mahle US:	MS95949
Victor Reinz:	
Glaser:	
Elring-Klinger:	

Notes:

FORD

MG493 — V8 Cylinder

OEM

6C3Z 9448A

5C4Z 9448A

Bolt Holes

8

Interchanges

Fel Pro:	MS96833
Mahle US:	MS19312
Victor Reinz:	
Glaser:	
Elring-Klinger:	

Notes:

FORD

MG495 — V8 Cylinder

OEM

AL3Z 9448A

Bolt Holes

5

Interchanges

Fel Pro:		
Mahle US:		
Victor Reinz:		
Glaser:		
Elring-Klinger:		

Notes:

FORD

MG497 — V8 Cylinder

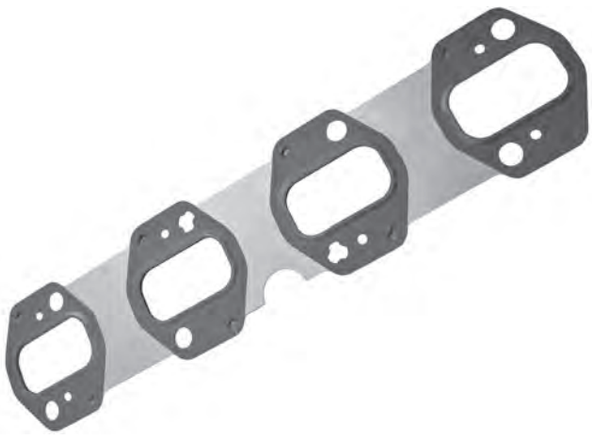

OEM

2C5Z 9448AA

Bolt Holes

8

Interchanges

Fel Pro:	MS95949	
Mahle US:	MS19449	MS95949
Victor Reinz:		
Glaser:		
Elring-Klinger:		

Notes:

FORD

MG4601 — V8 Cylinder

OEM

XW4Z 9448AC

Bolt Holes

8

Interchanges

Fel Pro:	MS96992
Mahle US:	MS19436
Victor Reinz:	
Glaser:	
Elring-Klinger:	

Notes:

FORD

MG4603 — V8 Cylinder

OEM

F3TZ9448A

Bolt Holes

8

Interchanges

Fel Pro:	MS95954
Mahle US:	MS16283
Victor Reinz:	
Glaser:	
Elring-Klinger:	

Notes:

FORD

MG480 — V10 Cylinder

OEM

YC2E 9431AD

YC2Z 9448A

YC2Z 9448CA

Bolt Holes

4

Interchanges

Fel Pro:	MS92568
Mahle US:	MS19535
Victor Reinz:	
Glaser:	
Elring-Klinger:	

Notes:

FORD

MG494 — V10 Cylinder

OEM

BC2Z 9448AB

YC2Z 9448AB

Bolt Holes

6

Interchanges

Fel Pro:	MS94108-1
Mahle US:	MS19468
Victor Reinz:	
Glaser:	
Elring-Klinger:	

Notes:

FORD

MG501 — V10 Cylinder

OEM

CC3Z 9448A
5C3Z 9448BA

Bolt Holes

10

Interchanges

Fel Pro:	MS96679-1
Mahle US:	MS19415
Victor Reinz:	
Glaser:	
Elring-Klinger:	

Notes:

GENERAL MOTORS PRODUCTS

MG450 — L4 Cylinder

OEM

96378805
86350469

Bolt Holes

10

Interchanges

Fel Pro:	MS96942
Mahle US:	MS19331
Victor Reinz:	71-533914-00
Glaser:	X82265-01
Elring-Klinger:	165.59

Notes:

GENERAL MOTORS PRODUCTS

MG750 — L4 Cylinder

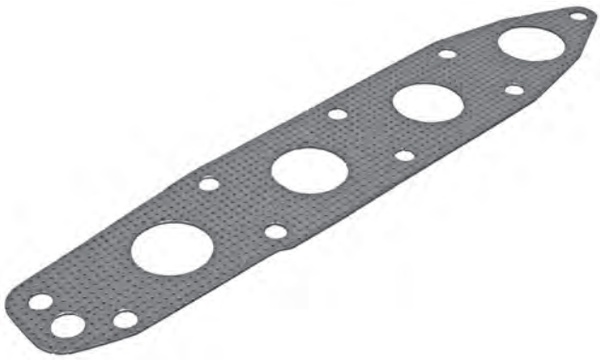

OEM

91172052
91173897

Bolt Holes

10

Interchanges

Fel Pro:	MS95032
Mahle US:	MS19708
Victor Reinz:	71-52954-10
Glaser:	X82229-01
Elring-Klinger:	176.57

Notes:

GENERAL MOTORS PRODUCTS

MG751 — L4 Cylinder

OEM

12565226

12592249

Bolt Holes

7

Interchanges

Fel Pro:	MS96888
Mahle US:	MS19757
Victor Reinz:	
Glaser:	
Elring-Klinger:	

Notes:

GENERAL MOTORS PRODUCTS

MG767 — L4 Cylinder

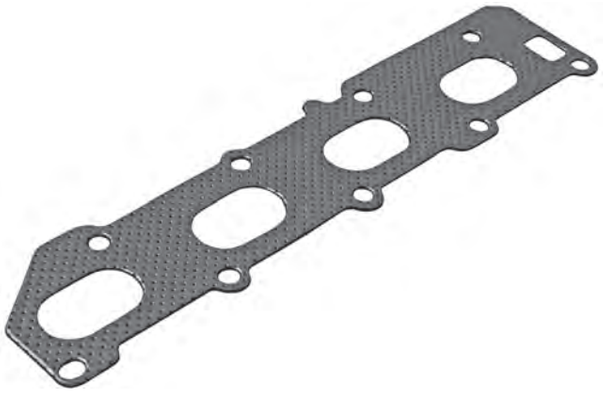

OEM

55566925

Bolt Holes

9

Interchanges

Fel Pro:	MS97203
Mahle US:	
Victor Reinz:	71-36304-00
Glaser:	X81822-01
Elring-Klinger:	809.333

Notes:

GENERAL MOTORS PRODUCTS

MG769 — L4 Cylinder

OEM

8 49 533

12992396

Bolt Holes

9

Interchanges

Fel Pro:	MS97154
Mahle US:	
Victor Reinz:	71-38158-00
Glaser:	X91995-01
Elring-Klinger:	355.34

Notes:

GENERAL MOTORS PRODUCTS

MG792 — L4 Cylinder

OEM

55565348

84 92 26

Bolt Holes

8

Interchanges

Fel Pro:	MS97202
Mahle US:	
Victor Reinz:	71-40667-00
Glaser:	X82525-01
Elring-Klinger:	132.13

Notes:

GENERAL MOTORS PRODUCTS

MG851 — L4 Cylinder

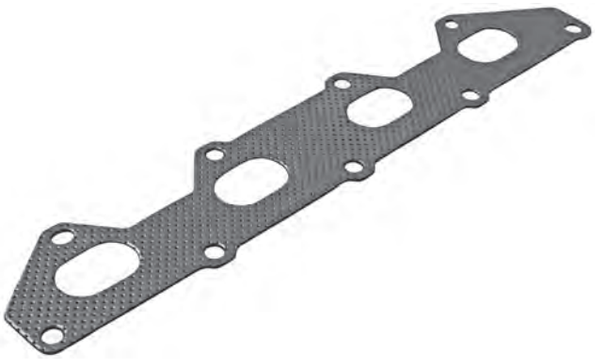

OEM

12786717

Bolt Holes

9

Interchanges

Fel Pro:	
Mahle US:	
Victor Reinz:	71-36321-00
Glaser:	X81512-01
Elring-Klinger:	67.92

Notes:

GENERAL MOTORS PRODUCTS

MG881 — L4 Cylinder

OEM

91177555

Bolt Holes

10

Interchanges

Fel Pro:	MS96602
Mahle US:	MS19732
Victor Reinz:	71-53179-00
Glaser:	X-82257-01
Elring-Klinger:	

Notes:

GENERAL MOTORS PRODUCTS

MG894 — L4 Cylinder

OEM

88972635

94856801

Bolt Holes

5

Interchanges

Fel Pro:	MS93909
Mahle US:	MS19202
Victor Reinz:	71-53107-00
Glaser:	X82253-01
Elring-Klinger:	169.73

Notes:

GENERAL MOTORS PRODUCTS

MG907 — L4 Cylinder

OEM

19185683

Bolt Holes

5

Interchanges

Fel Pro:	MS97146
Mahle US:	MS19724
Victor Reinz:	71-37166-00
Glaser:	X59400-01
Elring-Klinger:	

Notes:

GENERAL MOTORS PRODUCTS

MG1204 — L4 Cylinder

OEM

90537740

Bolt Holes

11

Interchanges

Fel Pro:	MS96376
Mahle US:	MS19334
Victor Reinz:	
Glaser:	
Elring-Klinger:	

Notes:

GENERAL MOTORS PRODUCTS

MG1213 — L4 Cylinder

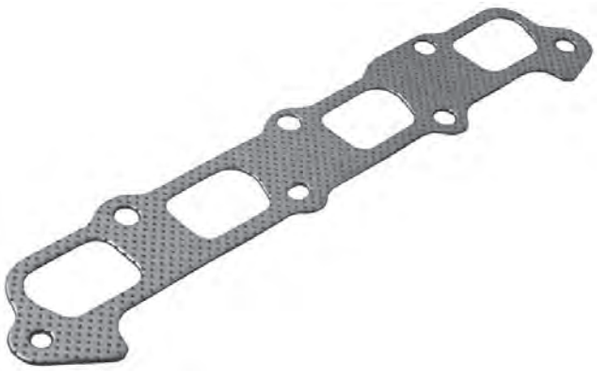

OEM

12579774

Bolt Holes

7

Interchanges

Fel Pro:	MS97008
Mahle US:	
Victor Reinz:	
Glaser:	
Elring-Klinger:	

Notes:

GENERAL MOTORS PRODUCTS

MG1214 — L4 Cylinder

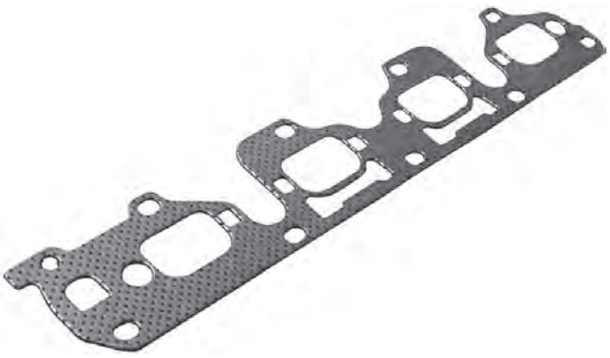

OEM

12584120

12589453

Bolt Holes

12

Interchanges

Fel Pro:	MS96377
Mahle US:	MS19335
Victor Reinz:	
Glaser:	
Elring-Klinger:	

Notes:

GENERAL MOTORS PRODUCTS

MG1217 — L4 Cylinder

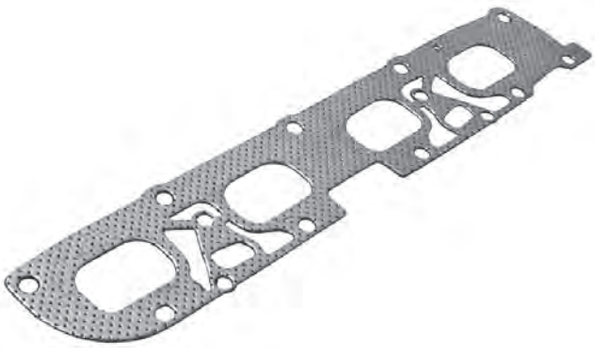

OEM

12622668

Bolt Holes

14

Interchanges

Fel Pro:	MS97122
Mahle US:	MS19566
Victor Reinz:	
Glaser:	
Elring-Klinger:	

Notes:

GENERAL MOTORS PRODUCTS

MG1222 — L4 Cylinder

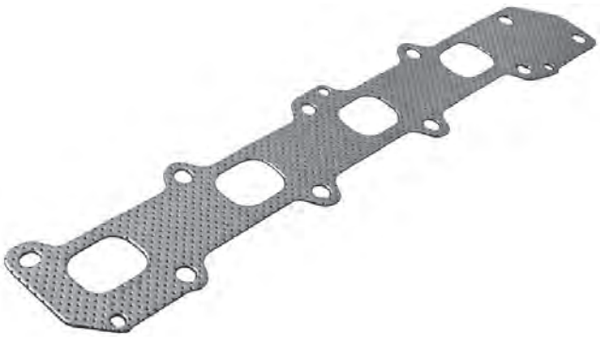

OEM

24576934

Bolt Holes

13

Interchanges

Fel Pro:	MS90284
Mahle US:	MS16321
Victor Reinz:	
Glaser:	
Elring-Klinger:	

Notes:

GENERAL MOTORS PRODUCTS

MG1223 — L4 Cylinder

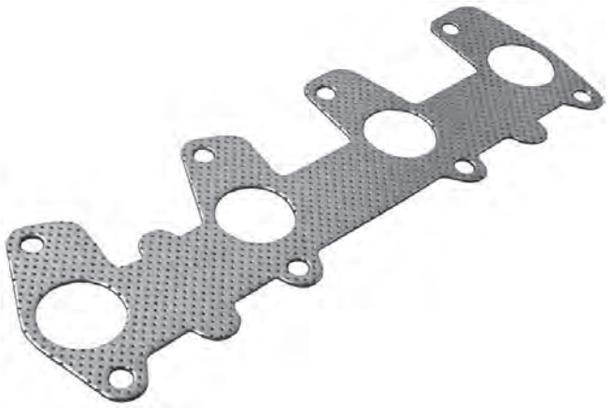

OEM

24576771

Bolt Holes

8

Interchanges

Fel Pro:	MS92794
Mahle US:	MS16312
Victor Reinz:	
Glaser:	
Elring-Klinger:	

Notes:

GENERAL MOTORS PRODUCTS

MG1230 — L4 Cylinder

OEM

9230949

Bolt Holes

12

Interchanges

Fel Pro:	
Mahle US:	
Victor Reinz:	
Glaser:	
Elring-Klinger:	

Notes:

GENERAL MOTORS PRODUCTS

MG1250 — L4 Cylinder

OEM

24576088

Bolt Holes

8

Interchanges

Fel Pro:	MS90540
Mahle US:	MS16311
Victor Reinz:	
Glaser:	
Elring-Klinger:	

Notes:

GENERAL MOTORS PRODUCTS

MG1251 — L4 Cylinder

OEM

12627072

Bolt Holes

5

Interchanges

Fel Pro:	
Mahle US:	
Victor Reinz:	
Glaser:	
Elring-Klinger:	

Notes:

GENERAL MOTORS PRODUCTS

MG1252 — L4 Cylinder

OEM

12657167

Bolt Holes

5

Interchanges

Fel Pro:	
Mahle US:	
Victor Reinz:	
Glaser:	
Elring-Klinger:	

Notes:

GENERAL MOTORS PRODUCTS

MG1253 — L4 Cylinder

OEM

24576382

24574082

Bolt Holes

10

Interchanges

Fel Pro:	MS90278
Mahle US:	MS16199
Victor Reinz:	
Glaser:	
Elring-Klinger:	

Notes:

GENERAL MOTORS PRODUCTS

MG1254 — L4 Cylinder

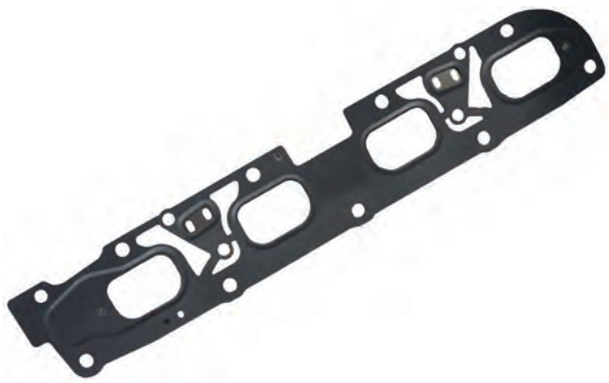

OEM

12646199

Bolt Holes

13

Interchanges

Fel Pro:	
Mahle US:	
Victor Reinz:	
Glaser:	
Elring-Klinger:	

Notes:

GENERAL MOTORS PRODUCTS

MG1256 — L4 Cylinder

OEM

25186670

Bolt Holes

10

Interchanges

Fel Pro:	
Mahle US:	
Victor Reinz:	
Glaser:	
Elring-Klinger:	

Notes:

GENERAL MOTORS PRODUCTS

MG1259 — L4 Cylinder

OEM

88972991

Bolt Holes

9

Interchanges

Fel Pro:	MS96398
Mahle US:	MS19227
Victor Reinz:	71-54106-00
Glaser:	X59466-01
Elring-Klinger:	

Notes:

GENERAL MOTORS PRODUCTS

MG1260 — L4 Cylinder

OEM

10101360

Bolt Holes

7

Interchanges

Fel Pro:	MS93689
Mahle US:	MS15433
Victor Reinz:	
Glaser:	
Elring-Klinger:	

Notes:

GENERAL MOTORS PRODUCTS

MG1212 — L5 Cylinder

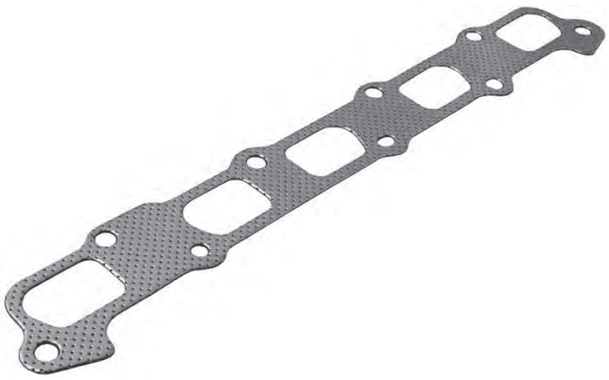

OEM

12579684

Bolt Holes

9

Interchanges

Fel Pro:	MS97009
Mahle US:	MS19755
Victor Reinz:	
Glaser:	
Elring-Klinger:	

Notes:

GENERAL MOTORS PRODUCTS

MG1242 — L5 Cylinder

OEM

12592248

12567694

Bolt Holes

9

Interchanges

Fel Pro:	MS96889
Mahle US:	MS19648
Victor Reinz:	
Glaser:	
Elring-Klinger:	

Notes:

GENERAL MOTORS PRODUCTS

MG776 — V6 Cylinder

OEM

12992739

Bolt Holes

7

Interchanges

Fel Pro:	MS96425
Mahle US:	MS19473
Victor Reinz:	71-34271-00
Glaser:	X81691-01
Elring-Klinger:	470.761

Notes:

GENERAL MOTORS PRODUCTS

MG1006 — V6 Cylinder

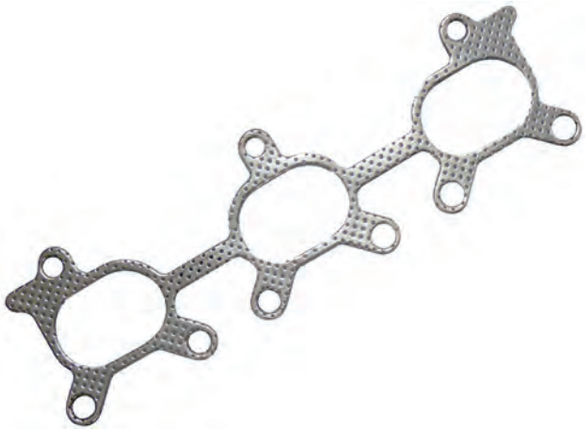

OEM

91176147

91177418

Bolt Holes

9

Interchanges

Fel Pro:	MS97043
Mahle US:	MS19686
Victor Reinz:	71-53693-00
Glaser:	X82299-01
Elring-Klinger:	

Notes:

GENERAL MOTORS PRODUCTS

MG1201 — V6 Cylinder

OEM

9128515

Bolt Holes

7

Interchanges

Fel Pro:	MS96088
Mahle US:	MS19492
Victor Reinz:	71-34238-00
Glaser:	X52446-01
Elring-Klinger:	239.541

Notes:

GENERAL MOTORS PRODUCTS

MG1207 — V6 Cylinder

OEM

12557872

Bolt Holes

8

Interchanges

Fel Pro:	MS96346
Mahle US:	MS19350
Victor Reinz:	
Glaser:	
Elring-Klinger:	

Notes:

GENERAL MOTORS PRODUCTS

MG1220 — V6 Cylinder

OEM

24506057

Bolt Holes

6

Interchanges

Fel Pro:	MS95829
Mahle US:	MS16108
Victor Reinz:	
Glaser:	
Elring-Klinger:	

Notes:

GENERAL MOTORS PRODUCTS

MG1221 — V6 Cylinder

OEM

24507676

Bolt Holes

6

Interchanges

Fel Pro:	MS95811	
Mahle US:	MS16364	MS16099
Victor Reinz:		
Glaser:		
Elring-Klinger:		

Notes:

GENERAL MOTORS PRODUCTS

MG1233 — V6 Cylinder

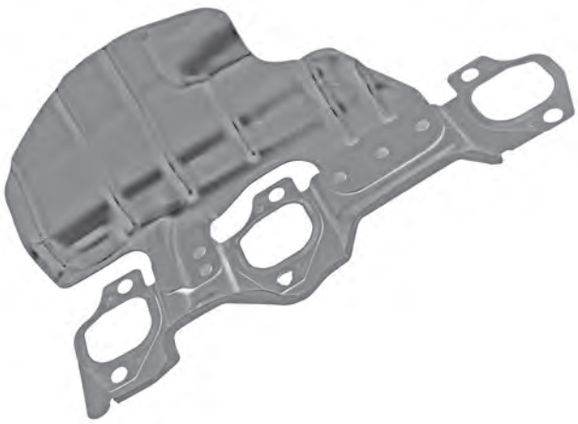

OEM

12592203

12589047

Bolt Holes

6

Interchanges

Fel Pro:	MS96818
Mahle US:	MS19545
Victor Reinz:	
Glaser:	
Elring-Klinger:	

Notes:

GENERAL MOTORS PRODUCTS

MG1234 — V6 Cylinder

OEM

12593246

Bolt Holes

6

Interchanges

Fel Pro:	MS96727
Mahle US:	MS19546
Victor Reinz:	
Glaser:	
Elring-Klinger:	

Notes:

GENERAL MOTORS PRODUCTS

MG1235 — V6 Cylinder

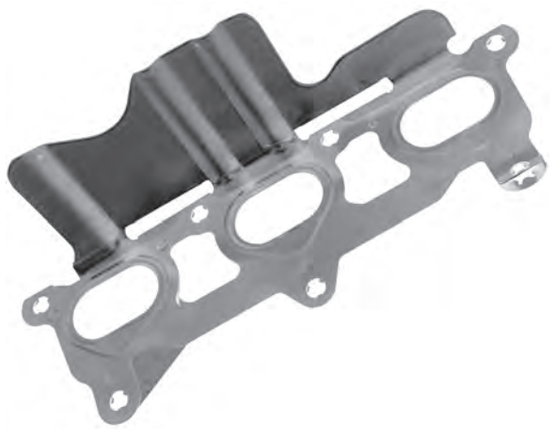

OEM

12593921

Bolt Holes

7

Interchanges

Fel Pro:	MS96970	MS97098
Mahle US:	MS19596	
Victor Reinz:		
Glaser:		
Elring-Klinger:		

Notes:

GENERAL MOTORS PRODUCTS

MG1239 — V6 Cylinder

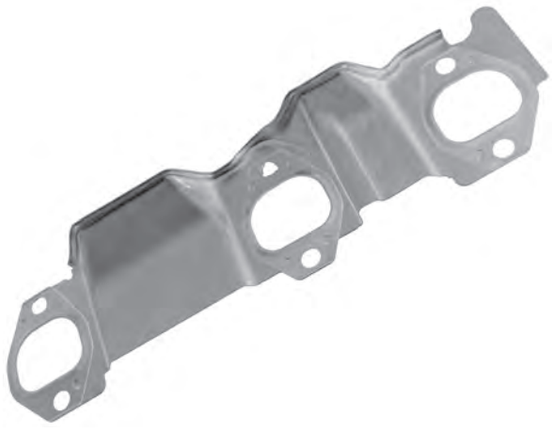

OEM

12572979

Bolt Holes

6

Interchanges

Fel Pro:	MS96329
Mahle US:	MS19349
Victor Reinz:	
Glaser:	
Elring-Klinger:	

Notes:

GENERAL MOTORS PRODUCTS

MG1240 — V6 Cylinder

OEM

12589048

12589047

Bolt Holes

6

Interchanges

Fel Pro:	MS96818
Mahle US:	MS19545
Victor Reinz:	
Glaser:	
Elring-Klinger:	

Notes:

GENERAL MOTORS PRODUCTS

MG1257 — V6 Cylinder

OEM

12565956

58 49 911

Bolt Holes

10

Interchanges

Fel Pro:	
Mahle US:	
Victor Reinz:	71-38239-00
Glaser:	X82350-01
Elring-Klinger:	

Notes:

GENERAL MOTORS PRODUCTS

MG758 — V8 Cylinder

OEM

12567655

Bolt Holes

8

Interchanges

Fel Pro:	MS96999
Mahle US:	MS19715
Victor Reinz:	
Glaser:	
Elring-Klinger:	

Notes:

GENERAL MOTORS PRODUCTS

MG1205 — V8 Cylinder

OEM

12550033

Bolt Holes

6

Interchanges

Fel Pro:	MS94054
Mahle US:	MS16093
Victor Reinz:	
Glaser:	
Elring-Klinger:	

Notes:

GENERAL MOTORS PRODUCTS

MG1206 — V8 Cylinder

OEM

12550276

Bolt Holes

8

Interchanges

Fel Pro:	MS95840
Mahle US:	MS16091
Victor Reinz:	
Glaser:	
Elring-Klinger:	

Notes:

GENERAL MOTORS PRODUCTS

MG1208 — V8 Cylinder

OEM

12558024

3533386

Bolt Holes

10

Interchanges

Fel Pro:	MS93455
Mahle US:	MS16372
Victor Reinz:	
Glaser:	
Elring-Klinger:	

Notes:

GENERAL MOTORS PRODUCTS

MG1210 — V8 Cylinder

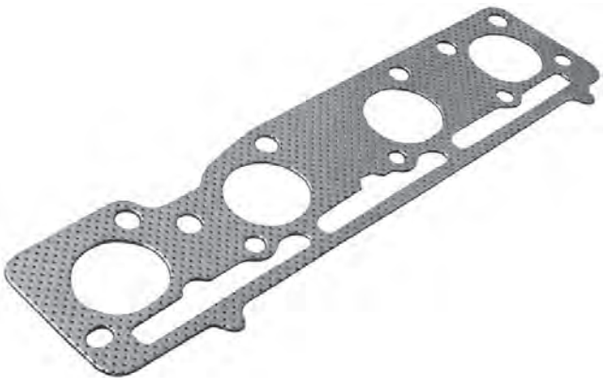

OEM

12557769

12573925

Bolt Holes

11

Interchanges

Fel Pro:	MS93371
Mahle US:	MS16373
Victor Reinz:	
Glaser:	
Elring-Klinger:	

Notes:

GENERAL MOTORS PRODUCTS

MG1211 — V8 Cylinder

OEM

12561912

12576221

Bolt Holes

6

Interchanges

Fel Pro:	MS92904
Mahle US:	MS19498
Victor Reinz:	
Glaser:	
Elring-Klinger:	

Notes:

GENERAL MOTORS PRODUCTS

MG1216 — V8 Cylinder

OEM

12600530

12617944

Bolt Holes

6

Interchanges

Fel Pro:	MS92467
Mahle US:	MS16124
Victor Reinz:	
Glaser:	
Elring-Klinger:	

Notes:

GENERAL MOTORS PRODUCTS

MG1232 — V8 Cylinder

OEM

12594171

Bolt Holes

6

Interchanges

Fel Pro:	
Mahle US:	
Victor Reinz:	
Glaser:	
Elring-Klinger:	

Notes:

GENERAL MOTORS PRODUCTS

MG1241 — V8 Cylinder

OEM

12558275

Bolt Holes

8

Interchanges

Fel Pro:	MS95840	
Mahle US:	MS16366	
Victor Reinz:		
Glaser:		
Elring-Klinger:		

Notes:

GENERAL MOTORS PRODUCTS

MG1248 — V8 Cylinder

OEM

98002804

97188684

Bolt Holes

8

Interchanges

Fel Pro:	MS96788	MS96543
Mahle US:	MS19398	
Victor Reinz:		
Glaser:		
Elring-Klinger:		

Notes:

GENERAL MOTORS PRODUCTS

MG1255 — V8 Cylinder

OEM

12657093

Bolt Holes

5

Interchanges

Fel Pro:	
Mahle US:	
Victor Reinz:	
Glaser:	
Elring-Klinger:	

Notes:

HONDA

MG590 — L4 Cylinder

OEM

18115-P00-003
18115-P000-004
18115-P2A-003

Bolt Holes

9

Interchanges

Fel Pro:	MS94118-1
Mahle US:	MS15487
Victor Reinz:	71-52354-00
Glaser:	X82144-01
Elring-Klinger:	

Notes:

HONDA

MG591 — L4 Cylinder

OEM

18115-PLC-J01
18115-PLC-J02

Bolt Holes

5

Interchanges

Fel Pro:	MS96447
Mahle US:	MS19345
Victor Reinz:	71-53734-00
Glaser:	X82304-01
Elring-Klinger:	270.46

Notes:

HONDA

MG592 — L4 Cylinder

OEM

18110-PM3-003
18115-P00-004
18115-900-003

Bolt Holes

9

Interchanges

Fel Pro:
Mahle US:
Victor Reinz:
Glaser:
Elring-Klinger:

Notes:

HONDA

MG593 — L4 Cylinder

OEM

18115-PNE-004
18115-PRB-A01
18115-PNE-004

Bolt Holes

5

Interchanges

Fel Pro:	MS96474
Mahle US:	MS19282
Victor Reinz:	71-53802-00
Glaser:	X82311-01
Elring-Klinger:	270.36

Notes:

HONDA

MG595 — L4 Cylinder

OEM

18115-PWA-004
18115-PWA-003

Bolt Holes

5

Interchanges

Fel Pro:	MS97170
Mahle US:	MS19808
Victor Reinz:	71-39879-00
Glaser:	X59318-01
Elring-Klinger:	452.11

Notes:

HONDA

MG597 — L4 Cylinder

OEM

18115-P0A-003
18115-P0A-004

Bolt Holes

8

Interchanges

Fel Pro:	MS94184
Mahle US:	MS16163
Victor Reinz:	71-53763-00
Glaser:	X82306-01
Elring-Klinger:	

Notes:

HONDA

MG600 — L4 Cylinder

OEM

18115-P5M-003

Bolt Holes

9

Interchanges

Fel Pro:	MS97047
Mahle US:	MS17954
Victor Reinz:	
Glaser:	
Elring-Klinger:	

Notes:

HONDA

MG604 — L4 Cylinder

OEM

18115-PCX-014

18115-PCX-004

Bolt Holes

7

Interchanges

Fel Pro:	
Mahle US:	
Victor Reinz:	71-53721-00
Glaser:	X85301-01
Elring-Klinger:	

Notes:

HONDA

MG607 — L4 Cylinder

OEM

18115-PAA-L21

Bolt Holes

8

Interchanges

Fel Pro:	MS94184
Mahle US:	MS17846
Victor Reinz:	
Glaser:	
Elring-Klinger:	

Notes:

HONDA

MG608 — L4 Cylinder

OEM

18115-PNB-003

Bolt Holes

5

Interchanges

Fel Pro:	MS96474
Mahle US:	MS19282
Victor Reinz:	71-53802-00
Glaser:	X82311-01
Elring-Klinger:	270.36

Notes:

HONDA

MG603 — V6 Cylinder

OEM

18115-P8E-A01

Bolt Holes

5

Interchanges

Fel Pro:	MS96166
Mahle US:	MS17814
Victor Reinz:	
Glaser:	
Elring-Klinger:	

Notes:

HYUNDAI

MG611 — L4 Cylinder

OEM

28521-23005
28521-23004
28521-23003

Bolt Holes

10

Interchanges

Fel Pro:	MS96128
Mahle US:	MS19327
Victor Reinz:	
Glaser:	
Elring-Klinger:	

Notes:

HYUNDAI

MG612 — L4 Cylinder

OEM

28521-25020

28521-25010

Bolt Holes

10

Interchanges

Fel Pro:	MS96162
Mahle US:	MS19241
Victor Reinz:	
Glaser:	
Elring-Klinger:	

Notes:

HYUNDAI

MG613 — L4 Cylinder

OEM

28521-2G401

Bolt Holes

9

Interchanges

Fel Pro:	
Mahle US:	
Victor Reinz:	
Glaser:	
Elring-Klinger:	

Notes:

HYUNDAI

MG614 — L4 Cylinder

OEM

28521-26600

410639

Bolt Holes

9

Interchanges

Fel Pro:	MS96332
Mahle US:	MS19243
Victor Reinz:	71-53971-00
Glaser:	X82316-01
Elring-Klinger:	458.58

Notes:

HYUNDAI

MG618 — L4 Cylinder

OEM

28521-22020
28521-22010

Bolt Holes

9

Interchanges

Fel Pro:	MS96162
Mahle US:	MS19241
Victor Reinz:	71-53173-00
Glaser:	X82256-01
Elring-Klinger:	135.48

Notes:

HYUNDAI

MG625 — L4 Cylinder

OEM

28521-2C400

Bolt Holes

10

Interchanges

Fel Pro:
Mahle US:
Victor Reinz:
Glaser:
Elring-Klinger:

Notes:

HYUNDAI

MG626 — L4 Cylinder

OEM

28521-2E000

Bolt Holes

5

Interchanges

Fel Pro:
Mahle US:
Victor Reinz:
Glaser:
Elring-Klinger:

Notes:

HYUNDAI

MG628 — L4 Cylinder

OEM

28521-2G700

Bolt Holes

10

Interchanges

Fel Pro:	
Mahle US:	
Victor Reinz:	
Glaser:	
Elring-Klinger:	

Notes:

HYUNDAI

MG610 — V6 Cylinder

OEM

28521-37103

28521-37104

Bolt Holes

7

Interchanges

Fel Pro:	MS96598
Mahle US:	MS19308
Victor Reinz:	
Glaser:	
Elring-Klinger:	

Notes:

HYUNDAI

MG619 — V6 Cylinder

OEM

28521-3C702

Bolt Holes

10

Interchanges

Fel Pro:	MS97074
Mahle US:	MS19725
Victor Reinz:	
Glaser:	
Elring-Klinger:	

Notes:

HYUNDAI

MG620 — V6 Cylinder

OEM

28521-39800

28521-35500

Bolt Holes

7

Interchanges

Fel Pro:	MS95082
Mahle US:	MS19300
Victor Reinz:	
Glaser:	
Elring-Klinger:	

Notes:

HYUNDAI

MG621 — V6 Cylinder

OEM

28521-3C712

28521-3C200

Bolt Holes

8

Interchanges

Fel Pro:	MS97074
Mahle US:	MS19725
Victor Reinz:	
Glaser:	
Elring-Klinger:	

Notes:

HYUNDAI

MG623 — V6 Cylinder

OEM

28521-3C702

Bolt Holes

9

Interchanges

Fel Pro:	MS97074
Mahle US:	
Victor Reinz:	71-10601-00
Glaser:	X90102-01
Elring-Klinger:	

Notes:

HYUNDAI

MG624 — V6 Cylinder

OEM

28521-3C712

Bolt Holes

8

Interchanges

Fel Pro:	MS97074
Mahle US:	MS19725
Victor Reinz:	
Glaser:	
Elring-Klinger:	

Notes:

HYUNDAI

MG629 — V6 Cylinder

OEM

28521-3C111

28521-3C100

28521-3C110

Bolt Holes

9

Interchanges

Fel Pro:

Mahle US:

Victor Reinz:

Glaser:

Elring-Klinger:

Notes:

HYUNDAI

MG627 — V8 Cylinder

OEM

28521-3F010

Bolt Holes

12

Interchanges

Fel Pro:

Mahle US:

Victor Reinz:

Glaser:

Elring-Klinger:

Notes:

INFINITI

MG724 — L4 Cylinder

OEM

14036-7J500

Bolt Holes

8

Interchanges

Fel Pro:	MS96113
Mahle US:	MS15684
Victor Reinz:	
Glaser:	
Elring-Klinger:	

Notes:

INFINITI

MG725 — V6 Cylinder

OEM

14036-AG000

14036-AG010

14036-31U00

Bolt Holes

12

Interchanges

Fel Pro:	MS91459
Mahle US:	MS19259
Victor Reinz:	71-53114-00
Glaser:	X82245-01
Elring-Klinger:	

Notes:

INFINITI

MG730 — V6 Cylinder

OEM

14036-0W000

Bolt Holes

8

Interchanges

Fel Pro:	MS96300
Mahle US:	MS19224
Victor Reinz:	
Glaser:	
Elring-Klinger:	

Notes:

INFINITI

MG723 — V8 Cylinder

OEM

14036-6P010

Bolt Holes

8

Interchanges

Fel Pro:	
Mahle US:	
Victor Reinz:	
Glaser:	
Elring-Klinger:	

Notes:

INFINITI

MG728 — V8 Cylinder

OEM

14036-AR000

Bolt Holes

16

Interchanges

Fel Pro:	
Mahle US:	MS19426
Victor Reinz:	
Glaser:	
Elring-Klinger:	

Notes:

INFINITI

MG729 — V8 Cylinder

OEM

14036-7S001

Bolt Holes

16

Interchanges

Fel Pro:	MS96946
Mahle US:	MS19526
Victor Reinz:	
Glaser:	
Elring-Klinger:	

Notes:

ISUZU

MG1213 — L4 Cylinder

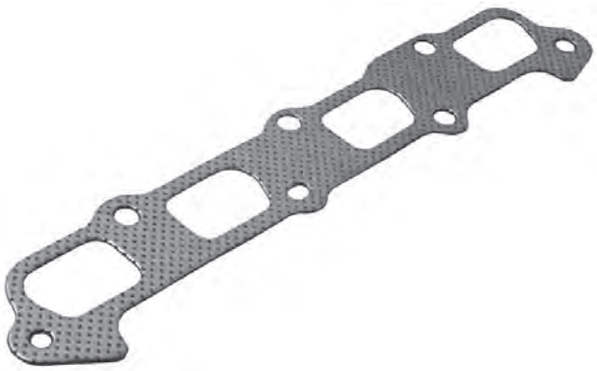

OEM

8-12579-774-0

Bolt Holes

7

Interchanges

Fel Pro:	MS97008
Mahle US:	
Victor Reinz:	
Glaser:	
Elring-Klinger:	

Notes:

ISUZU

MG1212 — L5 Cylinder

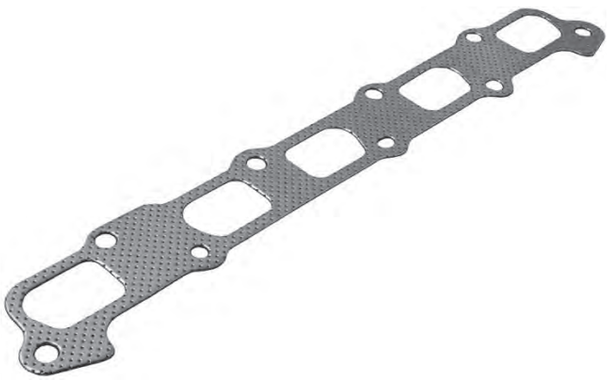

OEM

8-12579-684-0

Bolt Holes

9

Interchanges

Fel Pro:	MS97009
Mahle US:	MS19755
Victor Reinz:	
Glaser:	
Elring-Klinger:	

Notes:

ISUZU

MG1242 — L5 Cylinder

OEM

8-12592-248-0

8-12567-694-0

Bolt Holes

9

Interchanges

Fel Pro:	MS96889
Mahle US:	MS19648
Victor Reinz:	
Glaser:	
Elring-Klinger:	

Notes:

JAGUAR

MG651 — V6 Cylinder

OEM

XW4Z9448AA
XW4Z9448AD
F5RZ9448A
C2S33620

Bolt Holes

6

Interchanges

Fel Pro:	MS95715
Mahle US:	MS12415
Victor Reinz:	71-34307-00
Glaser:	X51629-01
Elring-Klinger:	024-760

Notes:

JEEP

MG434 — L4 Cylinder

OEM

4693 346AB

Bolt Holes

8

Interchanges

Fel Pro:	MS96961
Mahle US:	MS19563
Victor Reinz:	
Glaser:	
Elring-Klinger:	

Notes:

JEEP

MG448 — L4 Cylinder

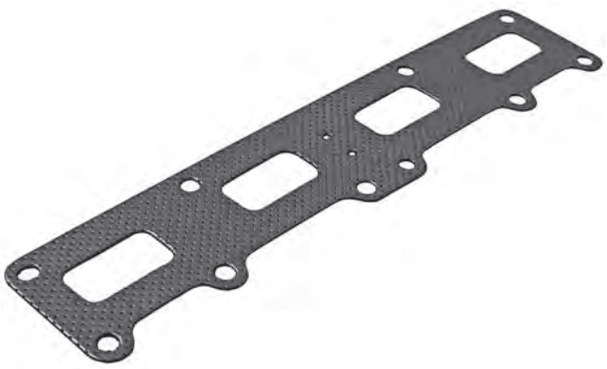

OEM

4781 255AA

Bolt Holes

10

Interchanges

Fel Pro:	MS92846
Mahle US:	MS19245
Victor Reinz:	
Glaser:	
Elring-Klinger:	

Notes:

JEEP

MG1001 — L4 Cylinder

OEM

1555 A185

Bolt Holes

10

Interchanges

Fel Pro:	MS96902
Mahle US:	MS19562
Victor Reinz:	71-54096-00
Glaser:	X59463-01
Elring-Klinger:	

Notes:

JEEP

MG441 — V6 Cylinder

OEM

53013 932AB

53013 932AA

Bolt Holes

8

Interchanges

Fel Pro:	MS96344
Mahle US:	MS16349
Victor Reinz:	
Glaser:	
Elring-Klinger:	

Notes:

JEEP

MG442 — V6 Cylinder

OEM

5301 3933AB

5303 3933AA

Bolt Holes

8

Interchanges

Fel Pro:	MS96344	MS96344-1
Mahle US:	MS16349	
Victor Reinz:		
Glaser:		
Elring-Klinger:		

Notes:

JEEP

MG444 — V8 Cylinder

OEM

5301 3944AA

Bolt Holes

11

Interchanges

Fel Pro:	MS96905
Mahle US:	MS19529
Victor Reinz:	
Glaser:	
Elring-Klinger:	

Notes:

JEEP

MG445 — V8 Cylinder

OEM

5303 4029AD

5303 0813

Bolt Holes

11

Interchanges

Fel Pro:	MS93217
Mahle US:	MS16336
Victor Reinz:	
Glaser:	
Elring-Klinger:	

Notes:

JEEP

MG446 — V8 Cylinder

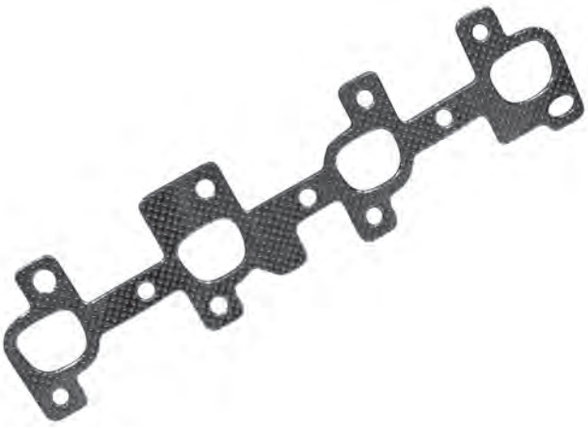

OEM

5303 4030AC

5303 0812

Bolt Holes

11

Interchanges

Fel Pro:	MS93217
Mahle US:	MS16336
Victor Reinz:	
Glaser:	
Elring-Klinger:	

Notes:

JEEP

MG4302 — V8 Cylinder

OEM

5045 495AA

53032 965AF

Bolt Holes

13

Interchanges

Fel Pro:	MS97083
Mahle US:	MS19832
Victor Reinz:	
Glaser:	
Elring-Klinger:	

Notes:

JEEP

MG4303 — V8 Cylinder

OEM

5045 496AA

53032 966AF

Bolt Holes

14

Interchanges

Fel Pro:	MS97083
Mahle US:	MS19832
Victor Reinz:	
Glaser:	
Elring-Klinger:	

Notes:

JEEP

MG4304 — V8 Cylinder

OEM

5303 2832AH

Bolt Holes

11

Interchanges

Fel Pro:	MS96994
Mahle US:	MS19508
Victor Reinz:	
Glaser:	
Elring-Klinger:	

Notes:

JEEP

MG4305 — V8 Cylinder

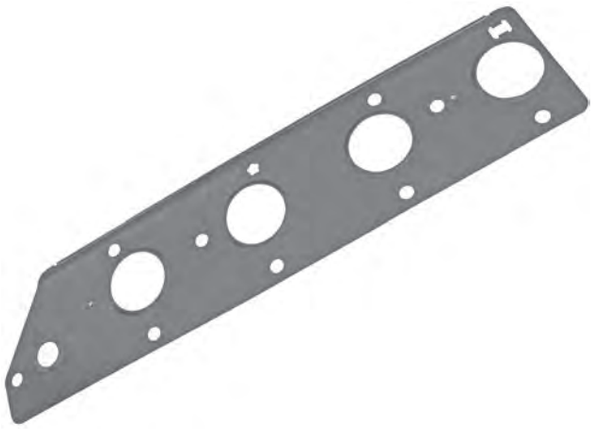

OEM

5303 2833AH

Bolt Holes

12

Interchanges

Fel Pro:	MS96994
Mahle US:	MS19508
Victor Reinz:	
Glaser:	
Elring-Klinger:	

Notes:

KIA

MG611 — L4 Cylinder

OEM

28521-23005
28521-23004
28521-23003

Bolt Holes

10

Interchanges

Fel Pro:	MS96128
Mahle US:	MS19327
Victor Reinz:	
Glaser:	
Elring-Klinger:	

Notes:

KIA

MG612 — L4 Cylinder

OEM

28521-25020
28521-25010

Bolt Holes

10

Interchanges

Fel Pro:	MS96162
Mahle US:	MS19241
Victor Reinz:	
Glaser:	
Elring-Klinger:	

Notes:

KIA

MG613 — L4 Cylinder

OEM

28521-2G401

Bolt Holes

9

Interchanges

Fel Pro:	
Mahle US:	
Victor Reinz:	
Glaser:	
Elring-Klinger:	

Notes:

KIA

MG614 — L4 Cylinder

OEM

28521-26600

410639

Bolt Holes

9

Interchanges

Fel Pro:	MS96332
Mahle US:	MS19243
Victor Reinz:	71-53971-00
Glaser:	X82316-01
Elring-Klinger:	458.58

Notes:

KIA

MG626 — L4 Cylinder

OEM

28521-2E000

Bolt Holes

5

Interchanges

Fel Pro:	MS97239
Mahle US:	
Victor Reinz:	
Glaser:	
Elring-Klinger:	

Notes:

KIA

MG628 — L4 Cylinder

OEM

28521-2G700

Bolt Holes

10

Interchanges

Fel Pro:	MS96874
Mahle US:	
Victor Reinz:	
Glaser:	
Elring-Klinger:	

Notes:

KIA

MG635 — L4 Cylinder

OEM

28521-2X500

0K30E-13460C

Bolt Holes

7

Interchanges

Fel Pro:	MS96733
Mahle US:	MS19548
Victor Reinz:	71-53486-00
Glaser:	X82278-01
Elring-Klinger:	

Notes:

KIA

MG636 — L4 Cylinder

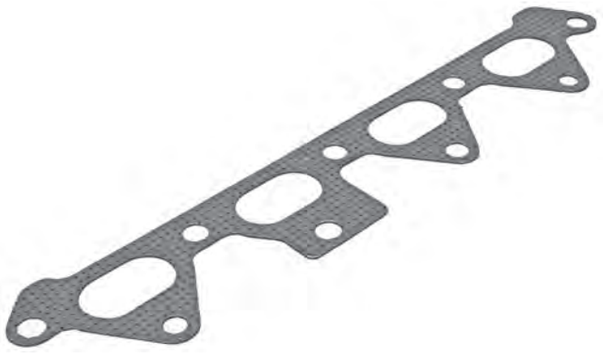

OEM

0K2AA-13-460

Bolt Holes

8

Interchanges

Fel Pro:	MS96310
Mahle US:	MS19253
Victor Reinz:	71-43476-00
Glaser:	X82277-01
Elring-Klinger:	

Notes:

KIA

MG638 — L4 Cylinder

OEM

0K054-13-460A
0K054-13-460B

Bolt Holes

8

Interchanges

Fel Pro:	
Mahle US:	
Victor Reinz:	71-52439-00
Glaser:	X82153-01
Elring-Klinger:	

Notes:

KIA

MG640 — L4 Cylinder

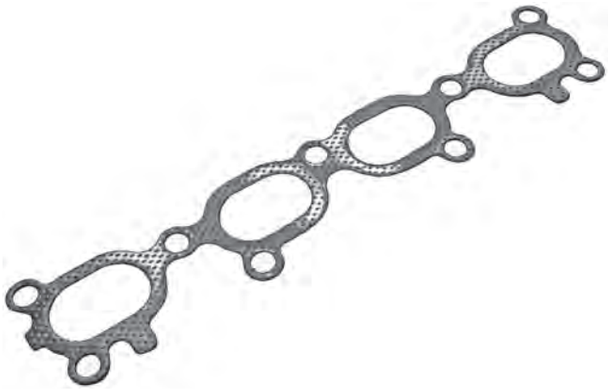

OEM

0FE3N-13-460
0FE3N-13-461

Bolt Holes

9

Interchanges

Fel Pro:	MS96290
Mahle US:	MS19294
Victor Reinz:	71-53056-00
Glaser:	X822239-01
Elring-Klinger:	

Notes:

KIA

MG643 — L4 Cylinder

OEM

28521-2X600

Bolt Holes

7

Interchanges

Fel Pro:	
Mahle US:	
Victor Reinz:	71-53471-00
Glaser:	X82276-01
Elring-Klinger:	

Notes:

KIA

MG610 — V6 Cylinder

OEM

28521-37103

28521-37104

Bolt Holes

7

Interchanges

Fel Pro:	MS96598
Mahle US:	MS19308
Victor Reinz:	
Glaser:	
Elring-Klinger:	

Notes:

KIA

MG619 — V6 Cylinder

OEM

28521-3C702

28521-3C100

Bolt Holes

10

Interchanges

Fel Pro:	MS97074
Mahle US:	MS19725
Victor Reinz:	
Glaser:	
Elring-Klinger:	

Notes:

KIA

MG620 — V6 Cylinder

OEM

28521-39800

28521-35500

Bolt Holes

7

Interchanges

Fel Pro:	MS95082
Mahle US:	MS19300
Victor Reinz:	
Glaser:	
Elring-Klinger:	

Notes:

KIA

MG621 — V6 Cylinder

OEM

28521-3C712

28521-3C200

Bolt Holes

8

Interchanges

Fel Pro:	MS97074
Mahle US:	MS19725
Victor Reinz:	
Glaser:	
Elring-Klinger:	

Notes:

KIA

MG623 — V6 Cylinder

OEM

28521-3C702

Bolt Holes

9

Interchanges

Fel Pro:	MS97074
Mahle US:	
Victor Reinz:	71-10601-00
Glaser:	X90102-01
Elring-Klinger:	

Notes:

KIA

MG624 — V6 Cylinder

OEM

28521-3C712

28521-3C200

Bolt Holes

8

Interchanges

Fel Pro:	MS97074
Mahle US:	MS19725
Victor Reinz:	
Glaser:	
Elring-Klinger:	

Notes:

KIA

MG629 — V6 Cylinder

OEM

28521-3C111

Bolt Holes

9

Interchanges

Fel Pro:	MS97074
Mahle US:	MS19725
Victor Reinz:	
Glaser:	
Elring-Klinger:	

Notes:

KIA

MG637 — V6 Cylinder

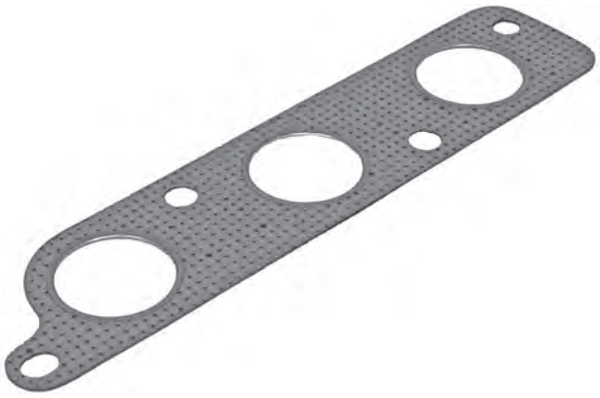

OEM

LKG100290L

Bolt Holes

4

Interchanges

Fel Pro:	
Mahle US:	MS19634
Victor Reinz:	
Glaser:	
Elring-Klinger:	

Notes:

KIA

MG627 — V8 Cylinder

OEM

28521-3F010

Bolt Holes

12

Interchanges

Fel Pro:	
Mahle US:	
Victor Reinz:	
Glaser:	
Elring-Klinger:	

Notes:

LANCIA

MG400 — L4 Cylinder

OEM

73 502 761
55194028
60611531
608127290

Bolt Holes

8

Interchanges

Fel Pro:	
Mahle US:	
Victor Reinz:	71-35658-00
Glaser:	X51965-01
Elring-Klinger:	448.51

Notes:

LANCIA

MG541 — L4 Cylinder

OEM

46526271

Bolt Holes

9

Interchanges

Fel Pro:	
Mahle US:	
Victor Reinz:	71-35702-00
Glaser:	X52653-01
Elring-Klinger:	329.26

Notes:

LANCIA

MG543 — L4 Cylinder

OEM

46820225
46412116

Bolt Holes

10

Interchanges

Fel Pro:	
Mahle US:	
Victor Reinz:	71-35652-00
Glaser:	X51964-01
Elring-Klinger:	332.21

Notes:

LANCIA

MG545 — L4 Cylinder

OEM

46754320

Bolt Holes

8

Interchanges

Fel Pro:	
Mahle US:	
Victor Reinz:	71-35639-00
Glaser:	X51143-01
Elring-Klinger:	375.16

Notes: Intake Manifold Gasket

LANCIA

MG546 — L4 Cylinder

OEM

46757609

46425908

Bolt Holes

9

Interchanges

Fel Pro:	
Mahle US:	
Victor Reinz:	71-35619-00
Glaser:	X52230-01
Elring-Klinger:	725.79

Notes:

LAND ROVER

MG590 — L4 Cylinder

OEM

18115-P00-003

18115-P000-004

18115-P2A-003

Bolt Holes

9

Interchanges

Fel Pro:	MS94118-1
Mahle US:	MS15487
Victor Reinz:	71-52382-00
Glaser:	
Elring-Klinger:	

Notes:

LAND ROVER

MG592 — L4 Cylinder

OEM

18115-PM3-003

Bolt Holes

9

Interchanges

Fel Pro:	
Mahle US:	
Victor Reinz:	71-52354-00
Glaser:	
Elring-Klinger:	

Notes:

LAND ROVER

MG840 — L4 Cylinder

OEM

LKG100551

Bolt Holes

5

Interchanges

Fel Pro:	
Mahle US:	
Victor Reinz:	71-34839-00
Glaser:	X82388-01
Elring-Klinger:	

Notes:

LAND ROVER

MG637 — V6 Cylinder

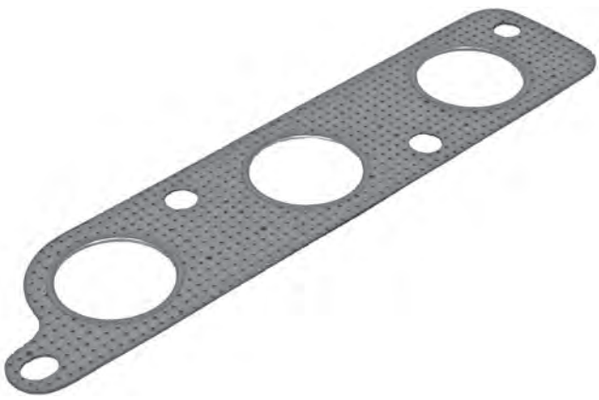

OEM

LKG100290L

Bolt Holes

4

Interchanges

Fel Pro:	
Mahle US:	MS19634
Victor Reinz:	
Glaser:	
Elring-Klinger:	

Notes:

LAND ROVER

MG663 — V6 Cylinder

OEM

4600701

1044252

Bolt Holes

6

Interchanges

Fel Pro:	MS90779
Mahle US:	MS19204
Victor Reinz:	
Glaser:	
Elring-Klinger:	448-102

Notes:

LEXUS

MG916 — L6 Cylinder

OEM

17173-66020

Bolt Holes

6

Interchanges

Fel Pro:	MS97284
Mahle US:	MS19662
Victor Reinz:	
Glaser:	
Elring-Klinger:	

Notes: Front; Use With MG923

LEXUS

MG923 — L6 Cylinder

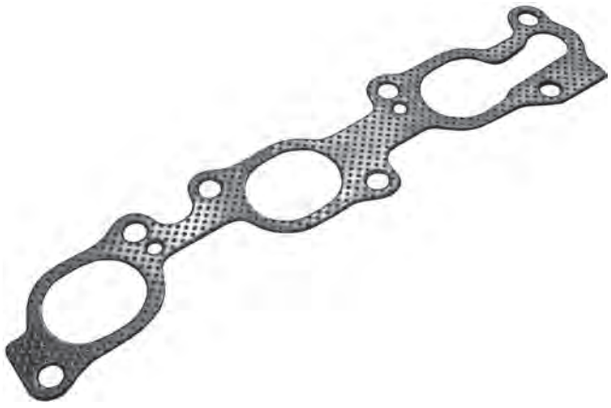

OEM

17198-66010

Bolt Holes

7

Interchanges

Fel Pro:	MS97284
Mahle US:	MS19662
Victor Reinz:	
Glaser:	
Elring-Klinger:	

Notes: Rear; Use With MG916

LEXUS

MG913 — V6 Cylinder

OEM

17173-62020

Bolt Holes

6

Interchanges

Fel Pro:	MS94471
Mahle US:	MS15563
Victor Reinz:	
Glaser:	
Elring-Klinger:	

Notes:

LEXUS

MG914 — V6 Cylinder

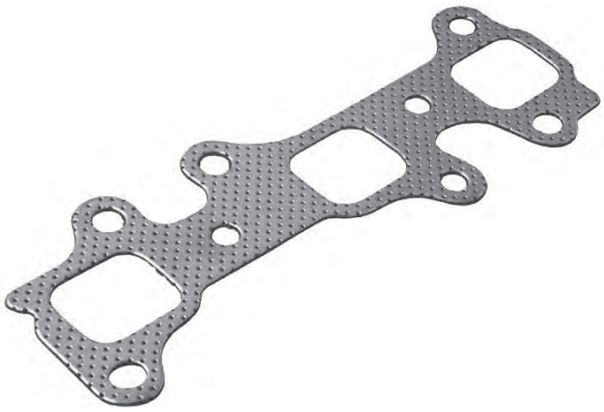

OEM

17173-62040

Bolt Holes

8

Interchanges

Fel Pro:	MS95405
Mahle US:	MS16075
Victor Reinz:	71-53571-00
Glaser:	X82286-01
Elring-Klinger:	

Notes:

LEXUS

MG1008 — V6 Cylinder

OEM

17173-0P020

Bolt Holes

6

Interchanges

Fel Pro:	MS96795
Mahle US:	MS19722
Victor Reinz:	
Glaser:	
Elring-Klinger:	

Notes:

LEXUS

MG909 — V8 Cylinder

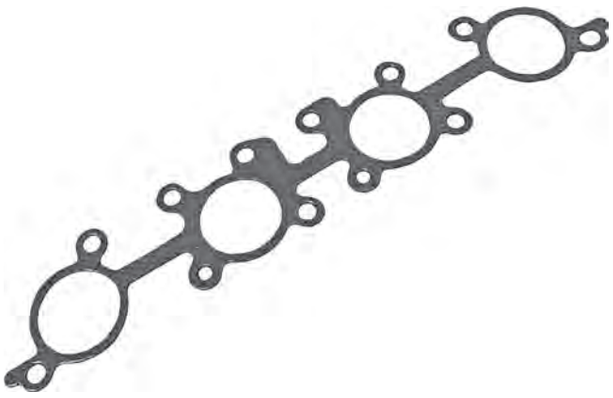

OEM

17173-38050

Bolt Holes

12

Interchanges

Fel Pro:	
Mahle US:	
Victor Reinz:	
Glaser:	
Elring-Klinger:	

Notes:

LEXUS

MG911 — V8 Cylinder

OEM

17173-50010

17173-50011

Bolt Holes

8

Interchanges

Fel Pro:	MS94754
Mahle US:	MS16087
Victor Reinz:	
Glaser:	
Elring-Klinger:	

Notes:

LEXUS

MG912 — V8 Cylinder

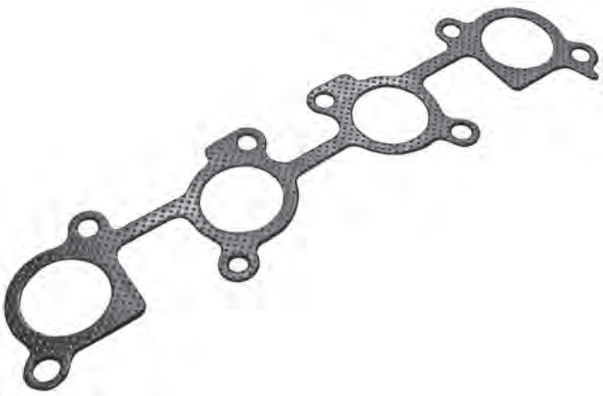

OEM

17173-50020

17173-50021

Bolt Holes

8

Interchanges

Fel Pro:	MS95439
Mahle US:	MS19217
Victor Reinz:	
Glaser:	
Elring-Klinger:	

Notes:

LEXUS

MG929 — V8 Cylinder

OEM

17198-50010

Bolt Holes

8

Interchanges

Fel Pro:	MS96701
Mahle US:	MS19217
Victor Reinz:	
Glaser:	
Elring-Klinger:	

Notes:

LEXUS

MG8993 — V8 Cylinder

OEM

17173-50030

Bolt Holes

12

Interchanges

Fel Pro:	MS96701
Mahle US:	MS19217
Victor Reinz:	
Glaser:	
Elring-Klinger:	

Notes:

MAZDA

MG464 — L4 Cylinder

OEM

C201-13-460

Bolt Holes

5

Interchanges

Fel Pro:	
Mahle US:	
Victor Reinz:	71-36553-10
Glaser:	X87773-01
Elring-Klinger:	337.81

Notes:

MAZDA

MG468 — L4 Cylinder

OEM

1E07-13-460
1E07-13-460A
1E07-13-460B

Bolt Holes

8

Interchanges

Fel Pro:	
Mahle US:	
Victor Reinz:	71-31527-00
Glaser:	X51175-01
Elring-Klinger:	128.161

Notes:

MAZDA

MG498 — L4 Cylinder

OEM

ZZCA-13-462
ZZC0-13-462

Bolt Holes

7

Interchanges

Fel Pro:	MS96901
Mahle US:	MS19655
Victor Reinz:	
Glaser:	
Elring-Klinger:	

Notes:

MAZDA

MG638 — L4 Cylinder

OEM

RF01-13-462

Bolt Holes

8

Interchanges

Fel Pro:	
Mahle US:	
Victor Reinz:	71-52439-00
Glaser:	X82153-01
Elring-Klinger:	545.99

Notes:

MAZDA

MG650 — L4 Cylinder

OEM

WL51-13-460A

Bolt Holes

8

Interchanges

Fel Pro:	
Mahle US:	
Victor Reinz:	71-52996-00
Glaser:	X82231-01
Elring-Klinger:	

Notes:

MAZDA

MG651 — L4 Cylinder

OEM

GY01-13-460B
GY01-13-460A
AJ79-13-460
AJ79-13-4M0

Bolt Holes

6

Interchanges

Fel Pro:	MS95715	MS96899
Mahle US:	MS12415	
Victor Reinz:	71-34307-00	
Glaser:	X51629-01	
Elring-Klinger:	24.76	

Notes:

MAZDA

MG652 — L4 Cylinder

OEM

KL01-13-460

Bolt Holes

7

Interchanges

Fel Pro:	MS95428
Mahle US:	MS12456
Victor Reinz:	
Glaser:	
Elring-Klinger:	

Notes:

MAZDA

MG653 — L4 Cylinder

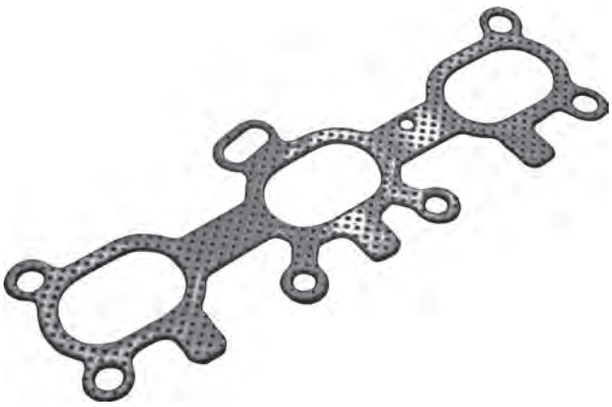

OEM

KL68-13-460

Bolt Holes

7

Interchanges

Fel Pro:	MS95428
Mahle US:	MS12456
Victor Reinz:	71-52854-00
Glaser:	X81932-01
Elring-Klinger:	

Notes:

MAZDA

MG654 — L4 Cylinder

OEM

L301-13-460

1F23-13-462

Bolt Holes

7

Interchanges

Fel Pro:	MS96655
Mahle US:	MS19365
Victor Reinz:	71-35488-00
Glaser:	X88193-01
Elring-Klinger:	24.39

Notes:

MAZDA

MG655 — L4 Cylinder

OEM

YF09-13-461

Bolt Holes

9

Interchanges

Fel Pro:	MS94427
Mahle US:	MS19292
Victor Reinz:	71-34309-00
Glaser:	X91907-01
Elring-Klinger:	267.7

Notes:

MAZDA

MG661 — L4 Cylinder

OEM

BPD3-13-460

Bolt Holes

9

Interchanges

Fel Pro:	MS94611	
Mahle US:	MS15646	
Victor Reinz:	71-53516-00	71-52864-00
Glaser:	X82281-01	X82217-01
Elring-Klinger:		

Notes:

MAZDA

MG662 — L4 Cylinder

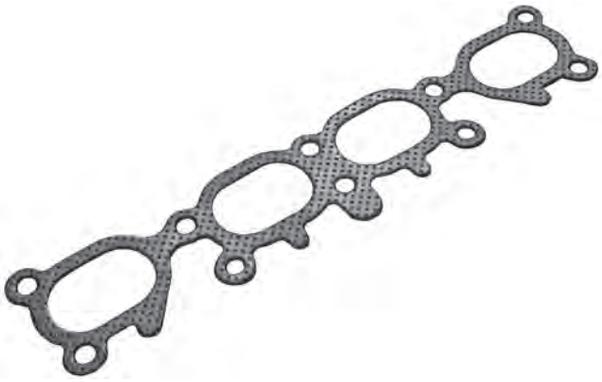

OEM

FS01-13-460A

FS01-13-460

Bolt Holes

10

Interchanges

Fel Pro:	MS95425
Mahle US:	MS16122
Victor Reinz:	71-52858-01
Glaser:	X82216-01
Elring-Klinger:	226.63

Notes:

MAZDA

MG664 — L4 Cylinder

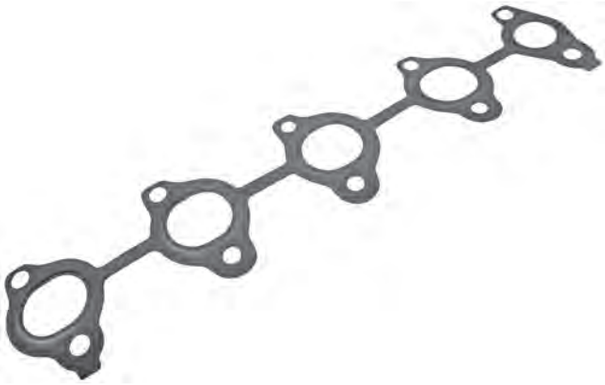

OEM

Y401-13-460

Bolt Holes

10

Interchanges

Fel Pro:	
Mahle US:	
Victor Reinz:	71-35487-00
Glaser:	X81696-01
Elring-Klinger:	761.041

Notes:

MAZDA

MG668 — L4 Cylinder

OEM

L3K9-13-460

Bolt Holes

10

Interchanges

Fel Pro:	MS97052
Mahle US:	MS19831
Victor Reinz:	71-54243-00
Glaser:	X59749-01
Elring-Klinger:	

Notes:

MAZDA

MG4306 — L4 Cylinder

OEM

BP8J-13-4M0

Bolt Holes

9

Interchanges

Fel Pro:	MS94611
Mahle US:	MS15646
Victor Reinz:	
Glaser:	
Elring-Klinger:	

Notes:

MAZDA

MG669 — R2 Cylinder

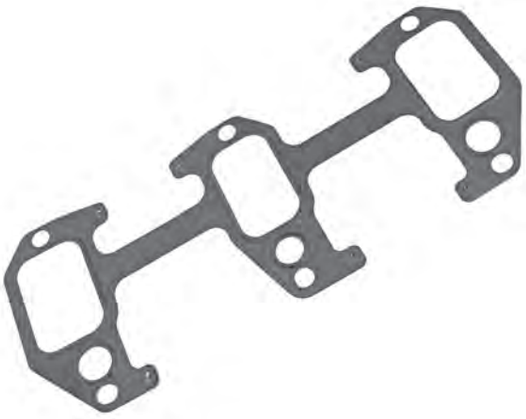

OEM

N3H1-13-461C

Bolt Holes

9

Interchanges

Fel Pro:	
Mahle US:	
Victor Reinz:	
Glaser:	
Elring-Klinger:	

Notes:

MAZDA

MG670 — R2 Cylinder

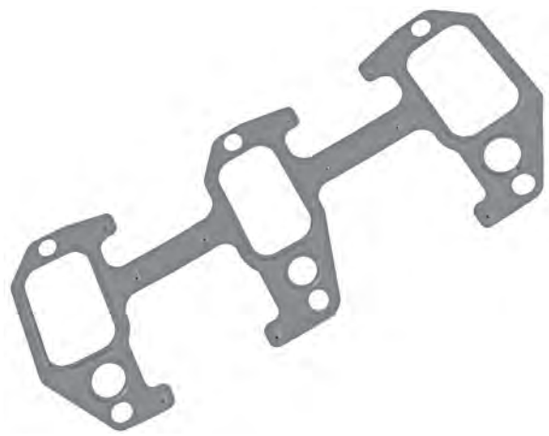

OEM

N3H1-13-461B

Bolt Holes

9

Interchanges

Fel Pro:	
Mahle US:	
Victor Reinz:	
Glaser:	
Elring-Klinger:	

Notes:

MAZDA

MG484 — V6 Cylinder

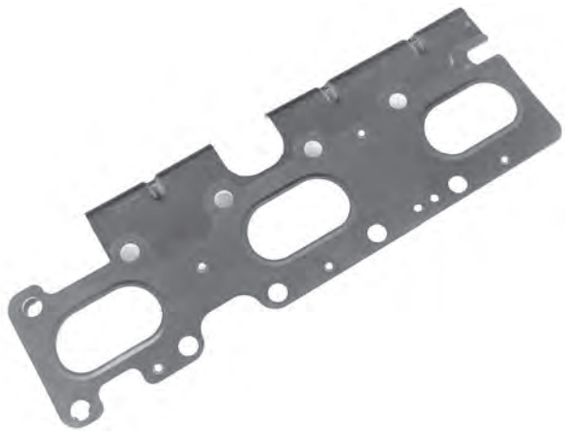

OEM

CY01-13-460A

CY01-13-460

Bolt Holes

11

Interchanges

Fel Pro:	MS97121
Mahle US:	MS19555
Victor Reinz:	71-54264-00
Glaser:	X59821-01
Elring-Klinger:	

Notes:

MAZDA

MG656 — V6 Cylinder

OEM

ZZM1-13-462A

ZZM1-13-460

Bolt Holes

6

Interchanges

Fel Pro:	MS95939
Mahle US:	MS15426
Victor Reinz:	
Glaser:	
Elring-Klinger:	

Notes:

MAZDA

MG660 — V6 Cylinder

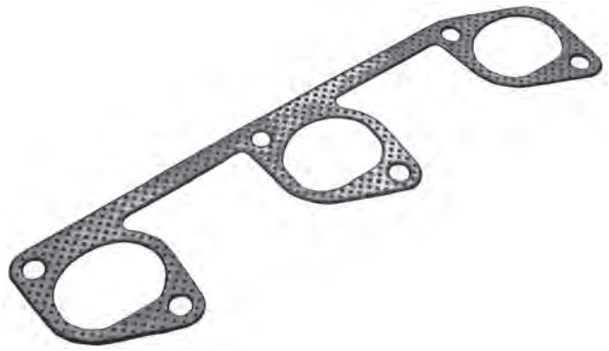

OEM

ZZP2-13-462

Bolt Holes

6

Interchanges

Fel Pro:	MS95960
Mahle US:	MS16290
Victor Reinz:	
Glaser:	
Elring-Klinger:	

Notes:

MAZDA

MG663 — V6 Cylinder

OEM

1F72-13-462

1F22-13-462

Bolt Holes

6

Interchanges

Fel Pro:	MS90779
Mahle US:	MS19204
Victor Reinz:	
Glaser:	
Elring-Klinger:	448-102

Notes:

MERCEDES BENZ

MG675 — L4 Cylinder

OEM

166 142 07 80

Bolt Holes

8

Interchanges

Fel Pro:	
Mahle US:	
Victor Reinz:	71-33412-00
Glaser:	X81900-01
Elring-Klinger:	

Notes:

MERCEDES BENZ

MG676 — L4 Cylinder

OEM

111 142 08 80

Bolt Holes

13

Interchanges

Fel Pro:	
Mahle US:	
Victor Reinz:	71-33174-00
Glaser:	X51359-01
Elring-Klinger:	921.408

Notes:

MERCEDES BENZ

MG677 — L4 Cylinder

OEM

271 142 03 80

Bolt Holes

8

Interchanges

Fel Pro:	
Mahle US:	
Victor Reinz:	71-33733-00
Glaser:	X81901-01
Elring-Klinger:	220.65

Notes:

MERCEDES BENZ

MG682 — L4 Cylinder

OEM

266 142 00 80

Bolt Holes

8

Interchanges

Fel Pro:	
Mahle US:	
Victor Reinz:	71-34942-00
Glaser:	X81900-01
Elring-Klinger:	

Notes:

MINI

MG424 — L4 Cylinder

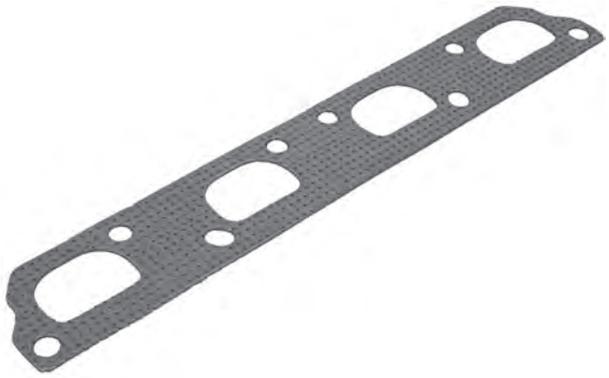

OEM

11 62 1 174 968

Bolt Holes

8

Interchanges

Fel Pro:	MS97003
Mahle US:	MS19279
Victor Reinz:	71-34782-00
Glaser:	X91399-01
Elring-Klinger:	12.28

Notes:

MINI

MG664 — L4 Cylinder

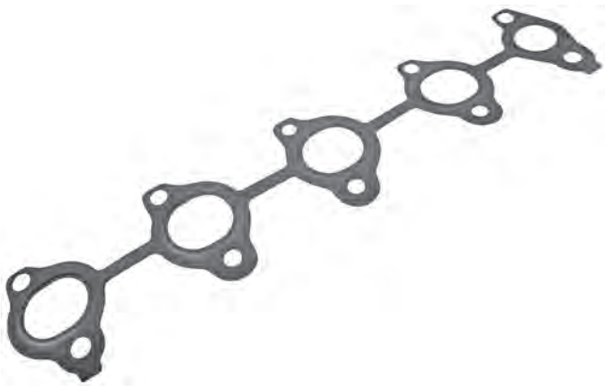

OEM

11 62 7 806 008

Bolt Holes

5

Interchanges

Fel Pro:	
Mahle US:	
Victor Reinz:	71-36553-10
Glaser:	X87773-01
Elring-Klinger:	337.81

Notes:

MITSUBISHI

MG702 — L4 Cylinder

OEM

1555A052

MN137217

Bolt Holes

5

Interchanges

Fel Pro:	MS96420
Mahle US:	MS19376
Victor Reinz:	
Glaser:	
Elring-Klinger:	

Notes:

MITSUBISHI

MG703 — L4 Cylinder

OEM

MR323599
MR497557

Bolt Holes

9

Interchanges

Fel Pro:	MS95314	
Mahle US:	MS16278	
Victor Reinz:	71-53161-00	71-52908-00
Glaser:	X82253-01	X82224-01
Elring-Klinger:	34.62	

Notes:

MITSUBISHI

MG710 — L4 Cylinder

OEM

MR386209

Bolt Holes

9

Interchanges

Fel Pro:	
Mahle US:	
Victor Reinz:	71-53186-00
Glaser:	X82258-01
Elring-Klinger:	10.14

Notes:

MITSUBISHI

MG1001 — L4 Cylinder

OEM

1555 A185

Bolt Holes

10

Interchanges

Fel Pro:	MS96902
Mahle US:	MS19562
Victor Reinz:	71-54096-00
Glaser:	X59463-01
Elring-Klinger:	

Notes:

MITSUBISHI

MG441 — V6 Cylinder

OEM

53013 932AB
53013 932AA

Bolt Holes

8

Interchanges

Fel Pro:	MS96344
Mahle US:	MS16349
Victor Reinz:	
Glaser:	
Elring-Klinger:	

Notes:

MITSUBISHI

MG442 — V6 Cylinder

OEM

53013 933AB
5303 3933AA

Bolt Holes

8

Interchanges

Fel Pro:	MS96344	MS96344-1
Mahle US:	MS16349	
Victor Reinz:		
Glaser:		
Elring-Klinger:		

Notes:

MITSUBISHI

MG700 — V6 Cylinder

OEM

MR281721
5159 013AA
MD184751

Bolt Holes

7

Interchanges

Fel Pro:	MS95711
Mahle US:	MS16267
Victor Reinz:	
Glaser:	
Elring-Klinger:	

Notes:

MITSUBISHI

MG705 — V6 Cylinder

OEM

MR266545
MN135895

Bolt Holes

7

Interchanges

Fel Pro:	MS95711
Mahle US:	MS16280
Victor Reinz:	
Glaser:	
Elring-Klinger:	

Notes:

MITSUBISHI

MG445 — V8 Cylinder

OEM

5303 4029AD
5303 0813

Bolt Holes

11

Interchanges

Fel Pro:	MS93217
Mahle US:	MS16336
Victor Reinz:	
Glaser:	
Elring-Klinger:	

Notes:

NISSAN

MG720 — L4 Cylinder

OEM

14036-6N200

Bolt Holes

8

Interchanges

Fel Pro:	MS96539
Mahle US:	MS19291
Victor Reinz:	71-53381-00
Glaser:	X82263-01
Elring-Klinger:	

Notes:

NISSAN

MG721 — L4 Cylinder

OEM

14036-53J00

Bolt Holes

8

Interchanges

Fel Pro:	MS96113
Mahle US:	MS15684
Victor Reinz:	71-52767-00
Glaser:	X82205-01
Elring-Klinger:	

Notes:

NISSAN

MG722 — L4 Cylinder

OEM

14036-JA00A

Bolt Holes

9

Interchanges

Fel Pro:	MS97148
Mahle US:	MS19399
Victor Reinz:	
Glaser:	
Elring-Klinger:	

Notes:

NISSAN

MG731 — L4 Cylinder

OEM

14036-99B00

14036-41B01

Bolt Holes

4

Interchanges

Fel Pro:	
Mahle US:	
Victor Reinz:	71-53096-00
Glaser:	X82242-01
Elring-Klinger:	457.01

Notes: 2 Required

NISSAN

MG810 — L4 Cylinder

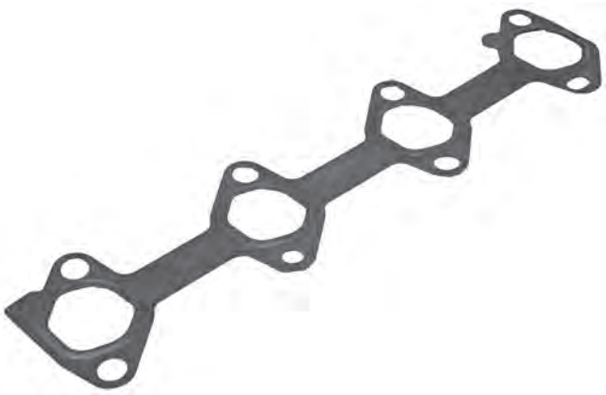

OEM

14036-BN700

Bolt Holes

8

Interchanges

Fel Pro:	
Mahle US:	
Victor Reinz:	71-37214-00
Glaser:	X81990-01
Elring-Klinger:	332-280

Notes:

NISSAN

MG725 — V6 Cylinder

OEM

14036-AG000
14036-AG010
14036-31U00

Bolt Holes

12

Interchanges

Fel Pro:	MS91459
Mahle US:	MS19259
Victor Reinz:	71-53114-00
Glaser:	X82245-01
Elring-Klinger:	

Notes:

NISSAN

MG727 — V6 Cylinder

OEM

14036-EA200

Bolt Holes

12

Interchanges

Fel Pro:	MS91459
Mahle US:	MS19259
Victor Reinz:	71-53114-00
Glaser:	X82245-01
Elring-Klinger:	

Notes:

NISSAN

MG730 — V6 Cylinder

OEM

14036-0W000

Bolt Holes

8

Interchanges

Fel Pro:	MS96300
Mahle US:	MS19224
Victor Reinz:	
Glaser:	
Elring-Klinger:	

Notes:

NISSAN

MG729 — V8 Cylinder

OEM

14036-7S001

Bolt Holes

16

Interchanges

Fel Pro:	MS96946
Mahle US:	MS19526
Victor Reinz:	
Glaser:	
Elring-Klinger:	

Notes:

OPEL

MG754 — L3 Cylinder

OEM

58 50 859

8 50 672

90529488

9225834

Bolt Holes

7

Interchanges

Fel Pro:	
Mahle US:	
Victor Reinz:	71-33509-00
Glaser:	X52442-01
Elring-Klinger:	74.35

Notes:

OPEL

MG752 — L4 Cylinder

OEM

58 50 640

90536199

Bolt Holes

10

Interchanges

Fel Pro:	
Mahle US:	
Victor Reinz:	71-34282-00
Glaser:	X81064-01
Elring-Klinger:	447-560

Notes:

OPEL

MG753 — L4 Cylinder

OEM

58 50 963

90529840

Bolt Holes

9

Interchanges

Fel Pro:	
Mahle US:	
Victor Reinz:	71-34157-00
Glaser:	X52443-01
Elring-Klinger:	432.581

Notes:

OPEL

MG755 — L4 Cylinder

OEM

8 49 518

24401490

Bolt Holes

8

Interchanges

Fel Pro:	
Mahle US:	
Victor Reinz:	71-34334-00
Glaser:	X81605-01
Elring-Klinger:	111.57

Notes:

OPEL

MG756 — L4 Cylinder

OEM

8 50 541
90106615
90409645

Bolt Holes

8

Interchanges

Fel Pro:	
Mahle US:	
Victor Reinz:	
Glaser:	
Elring-Klinger:	

Notes:

OPEL

MG757 — L4 Cylinder

OEM

9129716
9129716

Bolt Holes

10

Interchanges

Fel Pro:	
Mahle US:	
Victor Reinz:	71-34281-00
Glaser:	X52984-01
Elring-Klinger:	

Notes:

OPEL

MG759 — L4 Cylinder

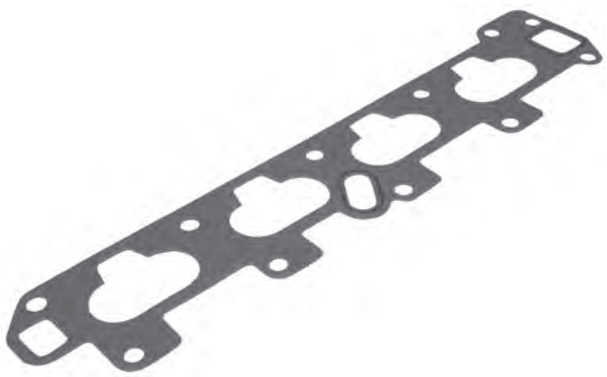

OEM

850 668
90502462

Bolt Holes

11

Interchanges

Fel Pro:	
Mahle US:	
Victor Reinz:	71-31966-10
Glaser:	X56925-01
Elring-Klinger:	743.77

Notes: Intake Manifold Gasket

OPEL

MG760 — L4 Cylinder

OEM

58 50 613
90470036
90572264

Bolt Holes

13

Interchanges

Fel Pro:	
Mahle US:	
Victor Reinz:	71-31969-00
Glaser:	X51343-01
Elring-Klinger:	916.382

Notes:

OPEL

MG761 — L4 Cylinder

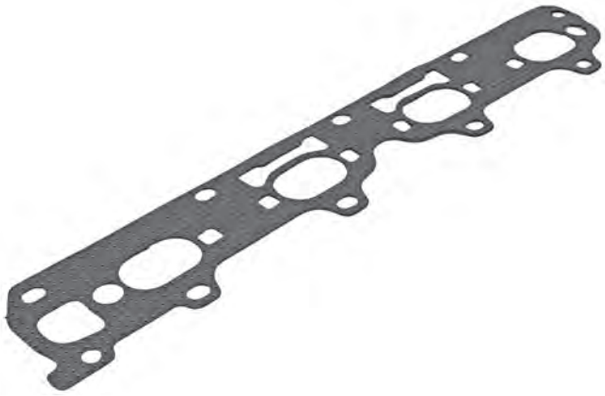

OEM

58 50 649
71739214

Bolt Holes

18

Interchanges

Fel Pro:	
Mahle US:	
Victor Reinz:	71-34287-00
Glaser:	X81508-01
Elring-Klinger:	124.372

Notes:

OPEL

MG762 — L4 Cylinder

OEM

8 49 199
24405959

Bolt Holes

11

Interchanges

Fel Pro:	
Mahle US:	
Victor Reinz:	71-36606-00
Glaser:	X81892-01
Elring-Klinger:	808.61

Notes:

OPEL

MG763 — L4 Cylinder

OEM

8 50 537
8 50 615
90091791
90409642

Bolt Holes

8

Interchanges

Fel Pro:	
Mahle US:	
Victor Reinz:	71-24602-30
Glaser:	X04280-01
Elring-Klinger:	645.71

Notes:

OPEL

MG764 — L4 Cylinder

OEM

58 50 862
90536057

Bolt Holes

7

Interchanges

Fel Pro:	
Mahle US:	
Victor Reinz:	71-31451-00
Glaser:	X86876-01
Elring-Klinger:	128.43

Notes: Intake Manifold Gasket

OPEL

MG765 — L4 Cylinder

OEM

8 50 521
24401511

Bolt Holes

10

Interchanges

Fel Pro:	
Mahle US:	
Victor Reinz:	71-34326-00
Glaser:	X88105-01
Elring-Klinger:	261.61

Notes: Intake Manifold Gasket

OPEL

MG767 — L4 Cylinder

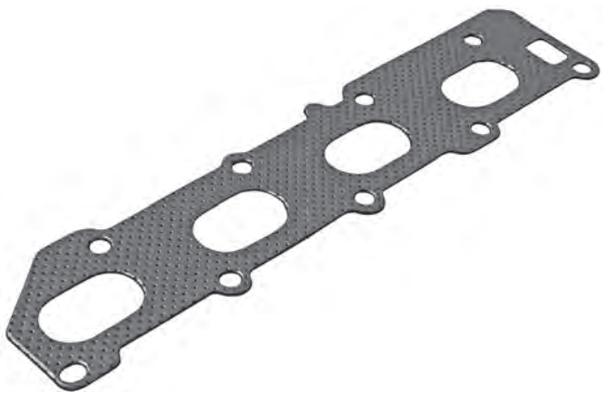

OEM

8 49 541
55566925

Bolt Holes

12

Interchanges

Fel Pro:	
Mahle US:	
Victor Reinz:	71-36304-00
Glaser:	X81822-01
Elring-Klinger:	809.333

Notes:

OPEL

MG768 — L4 Cylinder

OEM

8 49 339
97385827

Bolt Holes

5

Interchanges

Fel Pro:	
Mahle US:	
Victor Reinz:	71-38144-00
Glaser:	X82052-01
Elring-Klinger:	76.971

Notes:

OPEL

MG769 — L4 Cylinder

OEM

8 49 533
12992396

Bolt Holes

9

Interchanges

Fel Pro:	MS97154
Mahle US:	
Victor Reinz:	71-38158-00
Glaser:	X91995-01
Elring-Klinger:	355.34

Notes:

OPEL

MG771 — L4 Cylinder

OEM

8 50 656

90411887

Bolt Holes

14

Interchanges

Fel Pro:	
Mahle US:	
Victor Reinz:	71-31971-00
Glaser:	X51630-01
Elring-Klinger:	834.793

Notes:

OPEL

MG792 — L4 Cylinder

OEM

55565348

84 92 26

Bolt Holes

8

Interchanges

Fel Pro:	MS97202
Mahle US:	
Victor Reinz:	71-40667-00
Glaser:	X82525-01
Elring-Klinger:	132.13

Notes:

OPEL

MG820 — L4 Cylinder

OEM

93161637

Bolt Holes

8

Interchanges

Fel Pro:	
Mahle US:	
Victor Reinz:	71-37064-00
Glaser:	X82336-01
Elring-Klinger:	896-040

Notes:

OPEL

MG850 — L4 Cylinder

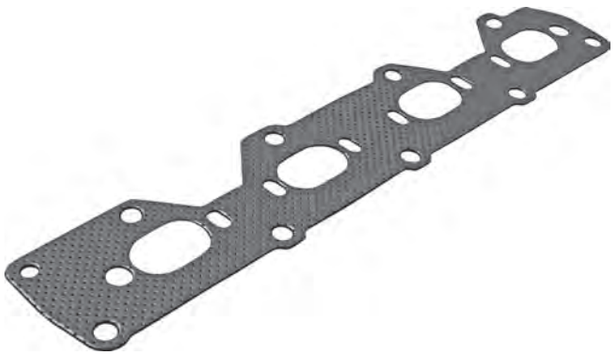

OEM

12794952

Bolt Holes

12

Interchanges

Fel Pro:	
Mahle US:	MS19467
Victor Reinz:	71-37479-00
Glaser:	X81813-01
Elring-Klinger:	

Notes:

OPEL

MG851 — L4 Cylinder

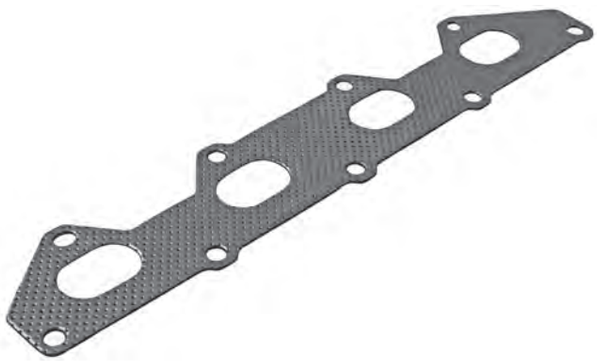

OEM

8 49 214

12 786 717

Bolt Holes

9

Interchanges

Fel Pro:	
Mahle US:	
Victor Reinz:	71-36321-00
Glaser:	X81512-01
Elring-Klinger:	67.92

Notes:

OPEL

MG776 — V6 Cylinder

OEM

12 99 2739

8 49 848

Bolt Holes

7

Interchanges

Fel Pro:	MS96425
Mahle US:	MS19473
Victor Reinz:	71-34271-00
Glaser:	X81691-01
Elring-Klinger:	470.761

Notes:

OPEL

MG1201 — V6 Cylinder

OEM

9128515
8 50 670
80 502 954

Bolt Holes

7

Interchanges

Fel Pro:	MS96088
Mahle US:	MS19492
Victor Reinz:	71-34238-00
Glaser:	X52446-01
Elring-Klinger:	239.541

Notes:

OPEL

MG1257 — V6 Cylinder

OEM

12565956
58 49 911

Bolt Holes

10

Interchanges

Fel Pro:	
Mahle US:	
Victor Reinz:	71-38329-00
Glaser:	X82350-01
Elring-Klinger:	

Notes:

PEUGEOT

MG542 — L4 Cylinder

OEM

0348.J9

Bolt Holes

8

Interchanges

Fel Pro:	
Mahle US:	
Victor Reinz:	71-35716-00
Glaser:	X00667-01
Elring-Klinger:	435.372

Notes: Intake & Exhaust Gasket

PEUGEOT

MG664 — L4 Cylinder

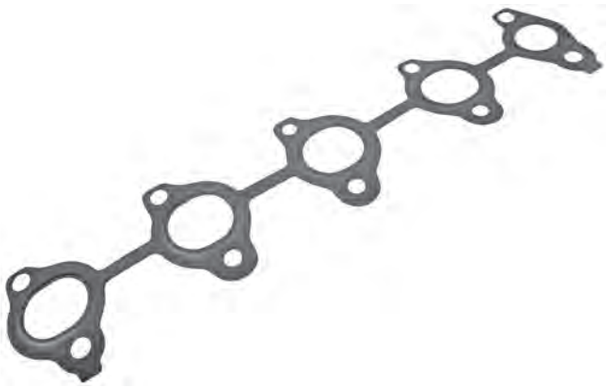

OEM

0349.J8

Bolt Holes

10

Interchanges

Fel Pro:	
Mahle US:	
Victor Reinz:	71-35487-00
Glaser:	X81696-01
Elring-Klinger:	761.041

Notes:

PEUGEOT

MG780 — L4 Cylinder

OEM

0349.J4

0349.L3

Bolt Holes

10

Interchanges

Fel Pro:	
Mahle US:	
Victor Reinz:	71-35067-00
Glaser:	X81664-01
Elring-Klinger:	215.451

Notes:

PEUGEOT

MG781 — L4 Cylinder

OEM

0348.H9

0348.J0

Bolt Holes

13

Interchanges

Fel Pro:	
Mahle US:	
Victor Reinz:	71-33683-00
Glaser:	X51239-01
Elring-Klinger:	919.829

Notes: Intake & Exhaust Gasket

PEUGEOT

MG782 — L4 Cylinder

OEM

3.49E+09

Bolt Holes

8

Interchanges

Fel Pro:	
Mahle US:	
Victor Reinz:	71-33688-00
Glaser:	X51508-01
Elring-Klinger:	711.91

Notes:

PEUGEOT

MG783 — L4 Cylinder

OEM

0349.J2

Bolt Holes

9

Interchanges

Fel Pro:	
Mahle US:	
Victor Reinz:	71-33223-00
Glaser:	X81070-01
Elring-Klinger:	156.77

Notes: Intake & Exhaust Gasket

PEUGEOT

MG784 — L4 Cylinder

OEM

0349.J6

Bolt Holes

12

Interchanges

Fel Pro:	
Mahle US:	
Victor Reinz:	71-33774-00
Glaser:	
Elring-Klinger:	515.45

Notes:

PEUGEOT

MG785 — L4 Cylinder

OEM

0349.L1

Bolt Holes

4

Interchanges

Fel Pro:	
Mahle US:	
Victor Reinz:	71-53506-00
Glaser:	X81894-01
Elring-Klinger:	291-540

Notes:

PEUGEOT

MG787 — L4 Cylinder

OEM

0349.J3

Bolt Holes

8

Interchanges

Fel Pro:	
Mahle US:	
Victor Reinz:	71-35068-00
Glaser:	X82382-01
Elring-Klinger:	258.311

Notes:

PEUGEOT

MG788 — L4 Cylinder

OEM

348.89

Bolt Holes

7

Interchanges

Fel Pro:	
Mahle US:	
Victor Reinz:	71-33682-00
Glaser:	X51239-01
Elring-Klinger:	

Notes: Intake & Exhaust Gasket

PORSCHE

MG970 — V6 Cylinder

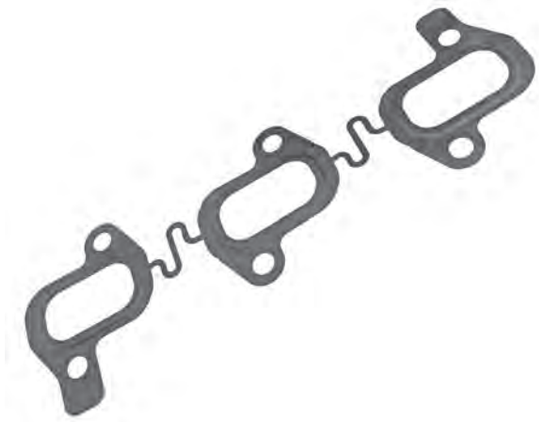

OEM

955.111.171.10

Bolt Holes

6

Interchanges

Fel Pro:	
Mahle US:	
Victor Reinz:	71-36117-00
Glaser:	X81941-01
Elring-Klinger:	148.271

Notes: 2 Required

RENAULT

MG810 — L4 Cylinder

OEM

82 00 414 346

82 00 128 551

Bolt Holes

8

Interchanges

Fel Pro:	
Mahle US:	
Victor Reinz:	71-37214-00
Glaser:	X81990-01
Elring-Klinger:	332-280

Notes:

RENAULT

MG812 — L4 Cylinder

OEM

60 01 543 517

77 00 867 360

77 00 559 702

77 00 854 652

Bolt Holes

7

Interchanges

Fel Pro:		
Mahle US:		
Victor Reinz:	71-33609-00	
Glaser:	X51622-01	
Elring-Klinger:	773.581	773.58

Notes:

RENAULT

MG813 — L4 Cylinder

OEM

77 00 746 591

Bolt Holes

9

Interchanges

Fel Pro:		
Mahle US:		
Victor Reinz:	71-31623-00	
Glaser:	X04712-01	
Elring-Klinger:	486.761	486.76

Notes: Intake Nanifold Gasket

RENAULT

MG814 — L4 Cylinder

OEM

77 00 854 041

Bolt Holes

7

Interchanges

Fel Pro:	
Mahle US:	
Victor Reinz:	71-31624-00
Glaser:	X04680-01
Elring-Klinger:	145.22

Notes:

RENAULT

MG815 — L4 Cylinder

OEM

77 00 107 181

Bolt Holes

9

Interchanges

Fel Pro:	
Mahle US:	
Victor Reinz:	71-31497-10
Glaser:	X52444-01
Elring-Klinger:	852.19

Notes:

RENAULT

MG816 — L4 Cylinder

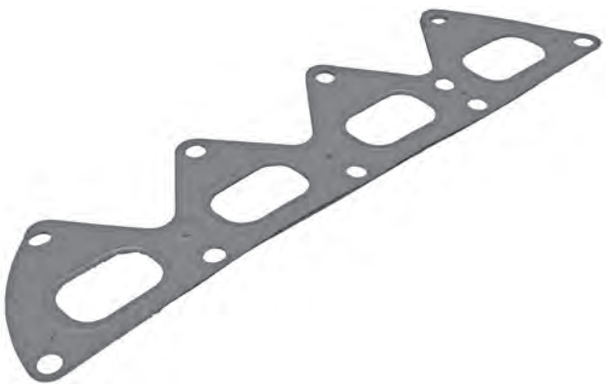

OEM

82 00 365 915

Bolt Holes

10

Interchanges

Fel Pro:	
Mahle US:	
Victor Reinz:	71-35861-00
Glaser:	X82380-01
Elring-Klinger:	584.94

Notes:

RENAULT

MG817 — L4 Cylinder

OEM

77 00 858 735

77 00 859 886

Bolt Holes

8

Interchanges

Fel Pro:	
Mahle US:	
Victor Reinz:	71-33641-00
Glaser:	X51619-01
Elring-Klinger:	313.73

Notes:

RENAULT

MG818 — L4 Cylinder

OEM

77 00 858 736

Bolt Holes

13

Interchanges

Fel Pro:		
Mahle US:		
Victor Reinz:	71-33639-00	
Glaser:	X57644-01	
Elring-Klinger:	331.751	331.75

Notes: Intake & Exhaust Gasket

RENAULT

MG820 — L4 Cylinder

OEM

82 00 723 473

Bolt Holes

8

Interchanges

Fel Pro:	
Mahle US:	
Victor Reinz:	71-37064-00
Glaser:	X82336-01
Elring-Klinger:	896-040

Notes:

ROVER

MG683 — L4 Cylinder

OEM

2.79E+11

2.79E+11

Bolt Holes

8

Interchanges

Fel Pro:	
Mahle US:	
Victor Reinz:	
Glaser:	
Elring-Klinger:	

Notes:

ROVER

MG781 — L4 Cylinder

OEM

Bolt Holes

13

Interchanges

Fel Pro:	
Mahle US:	
Victor Reinz:	71-33683-00
Glaser:	X51239-01
Elring-Klinger:	919.829

Notes: Intake & Exhaust Gasket

SAAB

MG850 — L4 Cylinder

OEM

12 79 4952

Bolt Holes

12

Interchanges

Fel Pro:	
Mahle US:	MS19467
Victor Reinz:	71-37479-00
Glaser:	X81813-01
Elring-Klinger:	

Notes:

SAAB

MG851 — L4 Cylinder

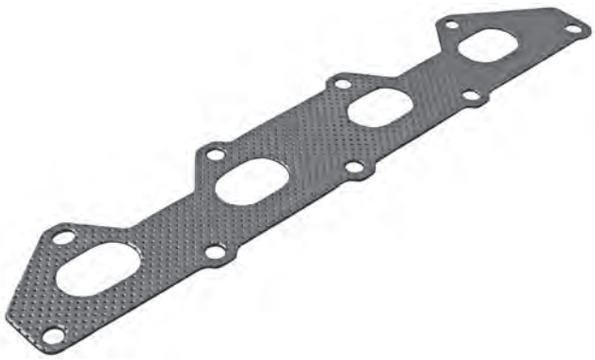

OEM

12 78 6717

Bolt Holes

9

Interchanges

Fel Pro:	
Mahle US:	
Victor Reinz:	71-36321-00
Glaser:	X81512-01
Elring-Klinger:	67.92

Notes:

SAAB

MG852 — L4 Cylinder

OEM

55 55 7285

9166497

Bolt Holes

10

Interchanges

Fel Pro:	
Mahle US:	
Victor Reinz:	71-35269-00
Glaser:	X81915-01
Elring-Klinger:	176.08

Notes:

SAAB

MG1201 — V6 Cylinder

OEM

9128515
47 70 954
77 70 954

Bolt Holes

7

Interchanges

Fel Pro:	MS96088
Mahle US:	MS19492
Victor Reinz:	71-34238-00
Glaser:	X52446-01
Elring-Klinger:	239.541

Notes:

SAAB

MG1257 — V6 Cylinder

OEM

12565956
58 49 911

Bolt Holes

10

Interchanges

Fel Pro:	
Mahle US:	
Victor Reinz:	71-38329-00
Glaser:	X82350-01
Elring-Klinger:	

Notes:

SATURN

MG1002 — L4 Cylinder

OEM

21008079

Bolt Holes

9

Interchanges

Fel Pro:	MS96118
Mahle US:	MS19456
Victor Reinz:	
Glaser:	
Elring-Klinger:	

Notes:

SATURN

MG1202 — L4 Cylinder

OEM

21006001

Bolt Holes

8

Interchanges

Fel Pro:	MS95631
Mahle US:	MS16146
Victor Reinz:	
Glaser:	
Elring-Klinger:	

Notes:

SATURN

MG1203 — L4 Cylinder

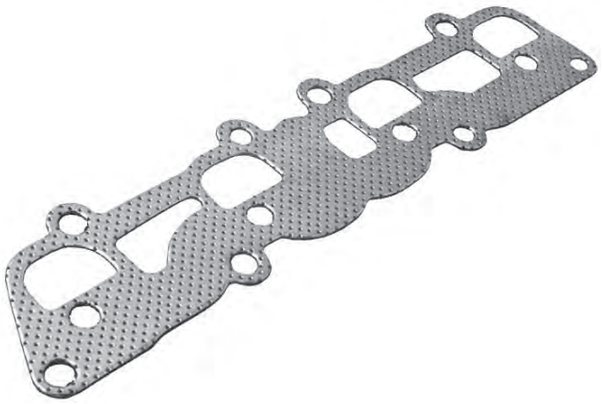

OEM

21008411

Bolt Holes

12

Interchanges

Fel Pro:	MS96117
Mahle US:	MS19425
Victor Reinz:	
Glaser:	
Elring-Klinger:	

Notes:

SATURN

MG1230 — L4 Cylinder

OEM

9230949

Bolt Holes

12

Interchanges

Fel Pro:	
Mahle US:	
Victor Reinz:	
Glaser:	
Elring-Klinger:	

Notes:

SATURN

MG1249 — L4 Cylinder

OEM

21008327
21000849

Bolt Holes

5

Interchanges

Fel Pro:	MS95632
Mahle US:	MS16148
Victor Reinz:	
Glaser:	
Elring-Klinger:	

Notes:

SATURN

MG776 — V6 Cylinder

OEM

12992739

Bolt Holes

7

Interchanges

Fel Pro:	MS96425
Mahle US:	MS19473
Victor Reinz:	71-34271-00
Glaser:	X81691-01
Elring-Klinger:	470.761

Notes:

SATURN

MG1233 — V6 Cylinder

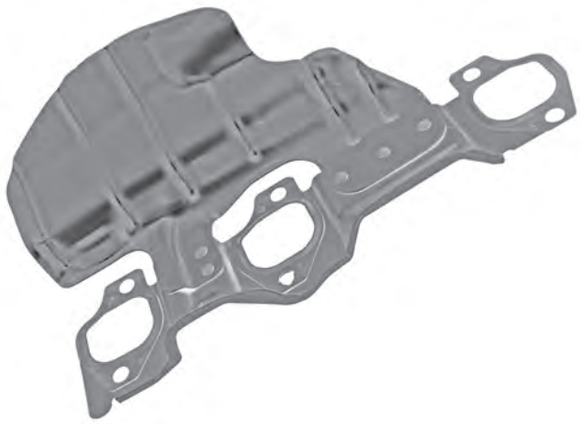

OEM

12592203
12589047

Bolt Holes

6

Interchanges

Fel Pro:	MS96818
Mahle US:	MS19545
Victor Reinz:	
Glaser:	
Elring-Klinger:	

Notes:

SATURN

MG1235 — V6 Cylinder

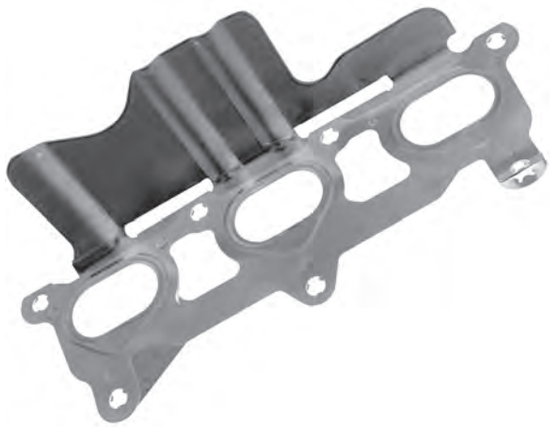

OEM

12593921

Bolt Holes

7

Interchanges

Fel Pro:	MS96970	MS97098
Mahle US:	MS19596	
Victor Reinz:		
Glaser:		
Elring-Klinger:		

Notes:

SATURN

MG1239 — V6 Cylinder

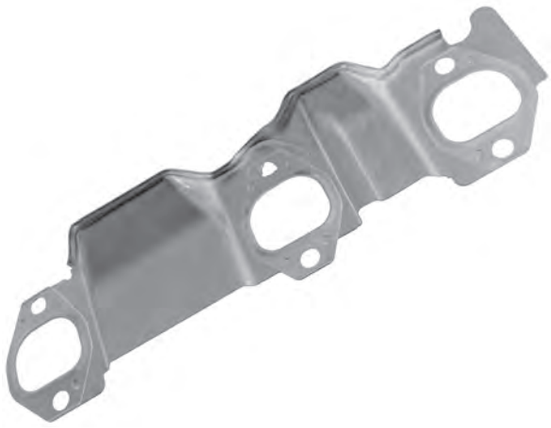

OEM

12572979

Bolt Holes

6

Interchanges

Fel Pro:	MS96329
Mahle US:	MS19349
Victor Reinz:	
Glaser:	
Elring-Klinger:	

Notes:

SATURN

MG1240 — V6 Cylinder

OEM

12589048

12589047

Bolt Holes

6

Interchanges

Fel Pro:	MS96818
Mahle US:	MS19545
Victor Reinz:	
Glaser:	
Elring-Klinger:	

Notes:

SEAT

MG415 — L3 Cylinder

OEM

058 253 306L
058 253 039G
058 253 039L

Bolt Holes

13

Interchanges

Fel Pro:	MS96116
Mahle US:	MS19233
Victor Reinz:	71-31958-00
Glaser:	X51632-01
Elring-Klinger:	148.19

Notes:

SEAT

MG416 — L3 Cylinder

OEM

045 253 039

Bolt Holes

6

Interchanges

Fel Pro:	
Mahle US:	
Victor Reinz:	71-34217-00
Glaser:	X52968-01
Elring-Klinger:	530.8

Notes:

SEAT

MG950 — L3 Cylinder

OEM

034 253 039E
03D 253 039B

Bolt Holes

7

Interchanges

Fel Pro:	
Mahle US:	
Victor Reinz:	71-36101-00
Glaser:	X81435-01
Elring-Klinger:	

Notes:

SEAT

MG414 — L4 Cylinder

OEM

030 129 717D

Bolt Holes

8

Interchanges

Fel Pro:	
Mahle US:	
Victor Reinz:	71-26279-20
Glaser:	X03745-01
Elring-Klinger:	671.7

Notes: Intake Manifold Gasket

SEAT

MG415 — L4 Cylinder

OEM

058 253 306L

058 253 039G

Bolt Holes

13

Interchanges

Fel Pro:	MS96116
Mahle US:	MS19233
Victor Reinz:	71-31958-00
Glaser:	X51632-01
Elring-Klinger:	148.19

Notes:

SEAT

MG420 — L4 Cylinder

OEM

048 129 717D

Bolt Holes

6

Interchanges

Fel Pro:	
Mahle US:	
Victor Reinz:	71-31856-00
Glaser:	X86258-01
Elring-Klinger:	146.77

Notes: Intake Manifold Gasket

SEAT

MG421 — L4 Cylinder

OEM

030 253 039A
030 129 585B
030 129 585

Bolt Holes

3

Interchanges

Fel Pro:	
Mahle US:	
Victor Reinz:	71-27476-00
Glaser:	X51580-01
Elring-Klinger:	750.23

Notes: 2 Required

SEAT

MG422 — L4 Cylinder

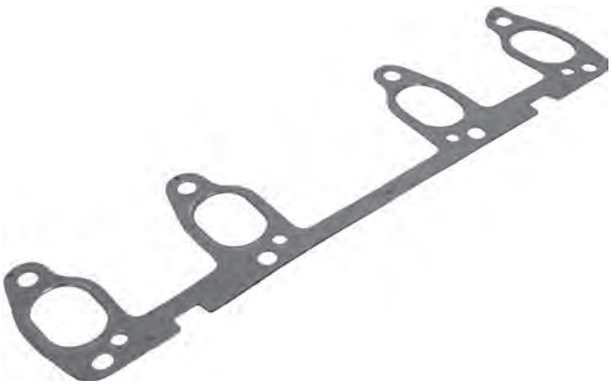

OEM

037 253 039D
037 253 039

Bolt Holes

12

Interchanges

Fel Pro:	MS94063
Mahle US:	MS18396
Victor Reinz:	71-31957-00
Glaser:	X51638-0
Elring-Klinger:	625.76

Notes:

SEAT

MG423 — L4 Cylinder

OEM

036 253 039F
036 253 039C

Bolt Holes

9

Interchanges

Fel Pro:	
Mahle US:	
Victor Reinz:	71-34206-00
Glaser:	X51579-01
Elring-Klinger:	135.23

Notes:

SEAT

MG953 — L4 Cylinder

OEM

06B 253 039E

Bolt Holes

12

Interchanges

Fel Pro:	
Mahle US:	
Victor Reinz:	71-34214-00
Glaser:	X81686-01
Elring-Klinger:	744.321

Notes:

SEAT

MG970 — V6 Cylinder

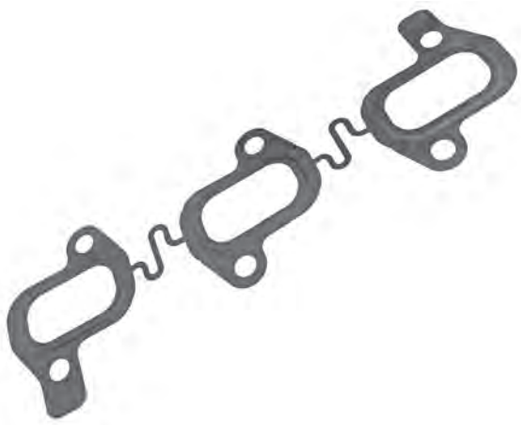

OEM

059 253 039D

Bolt Holes

6

Interchanges

Fel Pro:	
Mahle US:	
Victor Reinz:	71-36117-00
Glaser:	X81941-01
Elring-Klinger:	148.271

Notes: 2 Required

SKODA

MG415 — L3 Cylinder

OEM

058 253 306L
058 253 039G
058 253 039L

Bolt Holes

13

Interchanges

Fel Pro:	MS96116
Mahle US:	MS19233
Victor Reinz:	71-31958-00
Glaser:	X51632-01
Elring-Klinger:	148.19

Notes:

SKODA

MG416 — L3 Cylinder

OEM

045 253 039

Bolt Holes

6

Interchanges

Fel Pro:	
Mahle US:	
Victor Reinz:	71-34217-00
Glaser:	X52968-01
Elring-Klinger:	530.8

Notes:

SKODA

MG950 — L3 Cylinder

OEM

034 253 039E

03D 253 039B

Bolt Holes

7

Interchanges

Fel Pro:	
Mahle US:	
Victor Reinz:	71-36101-00
Glaser:	X81435-01
Elring-Klinger:	

Notes:

SKODA

MG420 — L4 Cylinder

OEM

048 129 717D

Bolt Holes

6

Interchanges

Fel Pro:	
Mahle US:	
Victor Reinz:	71-31856-00
Glaser:	X86258-01
Elring-Klinger:	146.77

Notes: Intake Manifold Gasket

SKODA

MG422 — L4 Cylinder

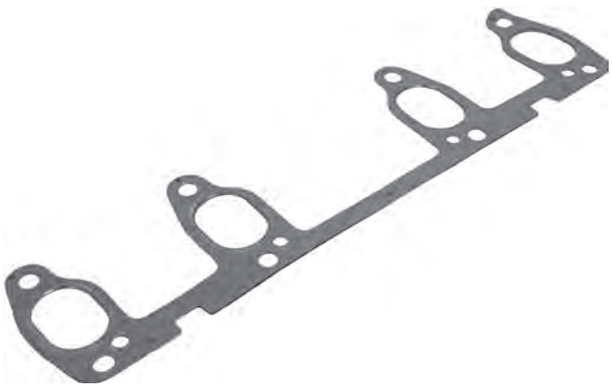

OEM

037 253 039D

037 253 039

Bolt Holes

12

Interchanges

Fel Pro:	MS97196
Mahle US:	MS18396
Victor Reinz:	71-31957-00
Glaser:	X51638-0
Elring-Klinger:	625.76

Notes:

SKODA

MG423 — L4 Cylinder

OEM

036 253 039F

036 253 039C

Bolt Holes

9

Interchanges

Fel Pro:	
Mahle US:	
Victor Reinz:	71-34206-00
Glaser:	X51579-01
Elring-Klinger:	135.23

Notes:

SKODA

MG953 — L4 Cylinder

OEM

06B 253 039E

Bolt Holes

12

Interchanges

Fel Pro:	
Mahle US:	
Victor Reinz:	71-34214-00
Glaser:	X81686-01
Elring-Klinger:	744.321

Notes:

SKODA

MG970 — V6 Cylinder

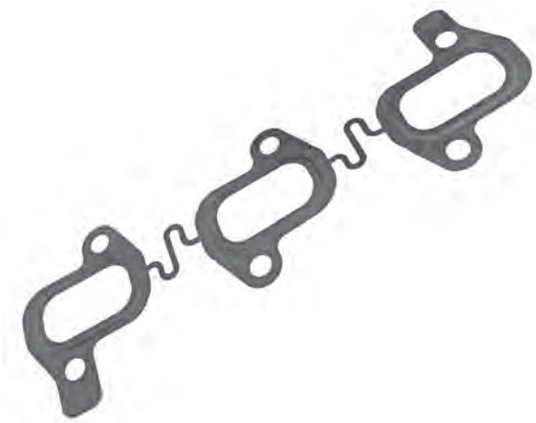

OEM

059 253 039D

Bolt Holes

6

Interchanges

Fel Pro:	
Mahle US:	
Victor Reinz:	71-36117-00
Glaser:	X81941-01
Elring-Klinger:	148.271

Notes: 2 Required

SMART

MG684 — L3 Cylinder

OEM

132 141 00 80

Bolt Holes

4

Interchanges

Fel Pro:	
Mahle US:	
Victor Reinz:	71-39167-00
Glaser:	X82387-01
Elring-Klinger:	381.25

Notes:

SUZUKI

MG750 — L4 Cylinder

OEM

14140-52G00
14140-58B00
14140-58B01

Bolt Holes

10

Interchanges

Fel Pro:	MS95032
Mahle US:	MS19708
Victor Reinz:	71-52954-10
Glaser:	X82229-01
Elring-Klinger:	176.57

Notes:

SUZUKI

MG783 — L4 Cylinder

OEM

14141-67G10

Bolt Holes

9

Interchanges

Fel Pro:	
Mahle US:	
Victor Reinz:	71-33223-00
Glaser:	X81070-01
Elring-Klinger:	156.77

Notes: Intake & Exhaust Gasket

SUZUKI

MG880 — L4 Cylinder

OEM

14140-69G01

14140-69G00

Bolt Holes

15

Interchanges

Fel Pro:	
Mahle US:	MS19789
Victor Reinz:	71-53697-00
Glaser:	X81988-01
Elring-Klinger:	198.72

Notes:

SUZUKI

MG881 — L4 Cylinder

OEM

14140-65D01

14140-65D02

Bolt Holes

10

Interchanges

Fel Pro:	MS96602
Mahle US:	MS19732
Victor Reinz:	71-53179-00
Glaser:	X-82257-01
Elring-Klinger:	

Notes:

SUZUKI

MG1006 — V6 Cylinder

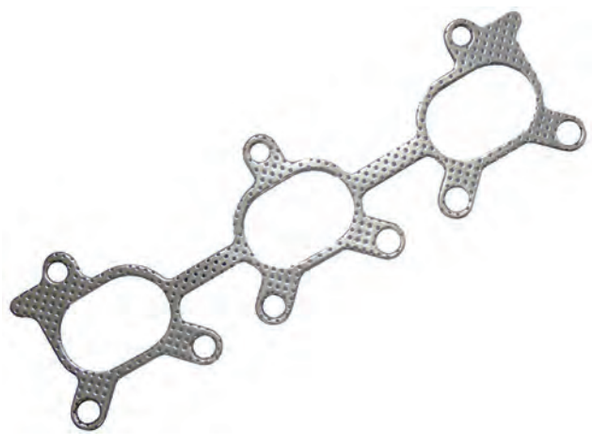

OEM

14140-67D03
14140-67D02

Bolt Holes

9

Interchanges

Fel Pro:	MS97043
Mahle US:	MS19686
Victor Reinz:	71-53693-00
Glaser:	X82299-01
Elring-Klinger:	

Notes:

TOYOTA

MG464 — L4 Cylinder

OEM

SU001-00826
SU001-00710

Bolt Holes

5

Interchanges

Fel Pro:	
Mahle US:	
Victor Reinz:	71-36553-10
Glaser:	X87773-01
Elring-Klinger:	337.81

Notes:

TOYOTA

MG785 — L4 Cylinder

OEM

17173-0Q010

Bolt Holes

4

Interchanges

Fel Pro:	
Mahle US:	
Victor Reinz:	71-53506-00
Glaser:	X81894-01
Elring-Klinger:	291-540

Notes:

TOYOTA

MG890 — L4 Cylinder

OEM

17173-0H020
17173-0H040
17173-28010

Bolt Holes

5

Interchanges

Fel Pro:	MS94140-1
Mahle US:	MS19248
Victor Reinz:	71-53544-00
Glaser:	X82285-01
Elring-Klinger:	457.09

Notes:

TOYOTA

MG893 — L4 Cylinder

OEM

17173-54030

Bolt Holes

8

Interchanges

Fel Pro:	
Mahle US:	
Victor Reinz:	71-52982-00
Glaser:	X82383-01
Elring-Klinger:	

Notes:

TOYOTA

MG894 — L4 Cylinder

OEM

17173-0D020
17173-22010

Bolt Holes

5

Interchanges

Fel Pro:	MS93909
Mahle US:	MS19202
Victor Reinz:	71-53107-00
Glaser:	X82253-01
Elring-Klinger:	169.73

Notes:

TOYOTA

MG895 — L4 Cylinder

OEM

17173-15030
17173-15040

Bolt Holes

5

Interchanges

Fel Pro:	
Mahle US:	
Victor Reinz:	71-52808-00
Glaser:	X82210-01
Elring-Klinger:	135.41

Notes:

TOYOTA

MG896 — L4 Cylinder

OEM

17173-74040

Bolt Holes

10

Interchanges

Fel Pro:	
Mahle US:	MS16509
Victor Reinz:	71-52802-00
Glaser:	X82209-01
Elring-Klinger:	

Notes:

TOYOTA

MG897 — L4 Cylinder

OEM

17177-54012
17177-54011

Bolt Holes

8

Interchanges

Fel Pro:	
Mahle US:	
Victor Reinz:	71-52609-00
Glaser:	X89650-01
Elring-Klinger:	

Notes: Intake Manifold Gasket

TOYOTA

MG898 — L4 Cylinder

OEM

17173-88360

Bolt Holes

8

Interchanges

Fel Pro:	MS94976
Mahle US:	MS16509
Victor Reinz:	
Glaser:	
Elring-Klinger:	

Notes: Can Replace MG921 2 Piece Design

TOYOTA

MG900 — L4 Cylinder

OEM

17173-0V010

17173-36020

Bolt Holes

5

Interchanges

Fel Pro:	
Mahle US:	
Victor Reinz:	71-10585-00
Glaser:	X90071-01
Elring-Klinger:	

Notes:

TOYOTA

MG901 — L4 Cylinder

OEM

17173-11050

Bolt Holes

6

Interchanges

Fel Pro:	MS95404
Mahle US:	MS19214
Victor Reinz:	71-52833-00
Glaser:	X82219-01
Elring-Klinger:	

Notes:

TOYOTA

MG902 — L4 Cylinder

OEM

17173-21020

Bolt Holes

5

Interchanges

Fel Pro:	MS96527
Mahle US:	MS19266
Victor Reinz:	71-53091-00
Glaser:	X82241-01
Elring-Klinger:	

Notes:

TOYOTA

MG907 — L4 Cylinder

OEM

17173-37010

17173-0T020

Bolt Holes

5

Interchanges

Fel Pro:	MS97146
Mahle US:	MS19724
Victor Reinz:	71-37166-00
Glaser:	X59400-01
Elring-Klinger:	295.51

Notes:

TOYOTA

MG918 — L4 Cylinder

OEM

17173-75020

Bolt Holes

6

Interchanges

Fel Pro:	MS92721
Mahle US:	MS19270
Victor Reinz:	
Glaser:	
Elring-Klinger:	

Notes:

TOYOTA

MG919 — L4 Cylinder

OEM

17173-75040

Bolt Holes

8

Interchanges

Fel Pro:	MS96921
Mahle US:	MS19733
Victor Reinz:	71-53644-00
Glaser:	X82294-01
Elring-Klinger:	

Notes:

TOYOTA

MG920 — L4 Cylinder

OEM

17173-76010

Bolt Holes

5

Interchanges

Fel Pro:	MS94929
Mahle US:	MS15685
Victor Reinz:	71-52791-00
Glaser:	X82208-01
Elring-Klinger:	

Notes:

TOYOTA

MG921 — L4 Cylinder

OEM

17173-88381

17173-88382

Bolt Holes

4

Interchanges

Fel Pro:	MS94976 1
Mahle US:	MS16509
Victor Reinz:	71-53689-00
Glaser:	X82298-01
Elring-Klinger:	

Notes: 2 Required

TOYOTA

MG922 — L4 Cylinder

OEM

17173-88600

Bolt Holes

5

Interchanges

Fel Pro:	MS93931
Mahle US:	MS19226
Victor Reinz:	71-54104-00
Glaser:	X59465-01
Elring-Klinger:	

Notes:

TOYOTA

MG925 — L4 Cylinder

OEM

17173-55010

Bolt Holes

8

Interchanges

Fel Pro:	
Mahle US:	
Victor Reinz:	71-52934-00
Glaser:	X82226-01
Elring-Klinger:	

Notes:

TOYOTA

MG926 — L4 Cylinder

OEM

17173-23010
17173-97401
17173-97401

Bolt Holes

5

Interchanges

Fel Pro:	
Mahle US:	
Victor Reinz:	71-53112-00
Glaser:	X92244-01
Elring-Klinger:	458.69

Notes:

TOYOTA

MG1259 — L4 Cylinder

OEM

17173-88601

Bolt Holes

9

Interchanges

Fel Pro:	MS96398
Mahle US:	MS19227
Victor Reinz:	71-54106-00
Glaser:	X59466-01
Elring-Klinger:	

Notes:

TOYOTA

MG892 — L6 Cylinder

OEM

17173-46020

Bolt Holes

6

Interchanges

Fel Pro:	MS96686
Mahle US:	MS12444
Victor Reinz:	71-10121-00
Glaser:	X89997-01
Elring-Klinger:	

Notes: 2 Required

TOYOTA

MG916 — L6 Cylinder

OEM

17173-66020

Bolt Holes

6

Interchanges

Fel Pro:	MS97284
Mahle US:	MS19662
Victor Reinz:	
Glaser:	
Elring-Klinger:	

Notes: Front; Use With MG923

TOYOTA

MG923 — L6 Cylinder

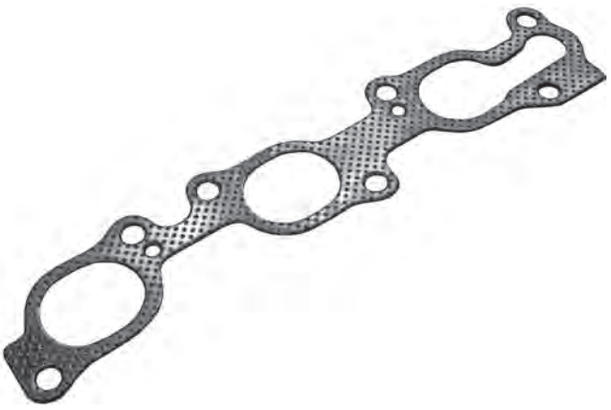

OEM

17198-66010

Bolt Holes

7

Interchanges

Fel Pro:	MS97284
Mahle US:	MS19662
Victor Reinz:	
Glaser:	
Elring-Klinger:	

Notes: Rear; Use With MG916

TOYOTA

MG891 — V6 Cylinder

OEM

17173-0A010

17173-20010

Bolt Holes

6

Interchanges

Fel Pro:	MS95819
Mahle US:	MS16344
Victor Reinz:	
Glaser:	
Elring-Klinger:	

Notes:

TOYOTA

MG903 — V6 Cylinder

OEM

17173-20030

Bolt Holes

6

Interchanges

Fel Pro:	MS96083
Mahle US:	MS19302
Victor Reinz:	
Glaser:	
Elring-Klinger:	

Notes:

TOYOTA

MG905 — V6 Cylinder

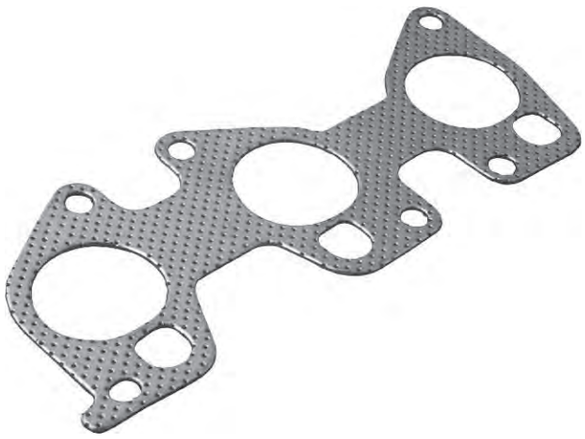

OEM

17173-31040

Bolt Holes

6

Interchanges

Fel Pro:	MS96913
Mahle US:	MS19542
Victor Reinz:	
Glaser:	
Elring-Klinger:	

Notes:

TOYOTA

MG906 — V6 Cylinder

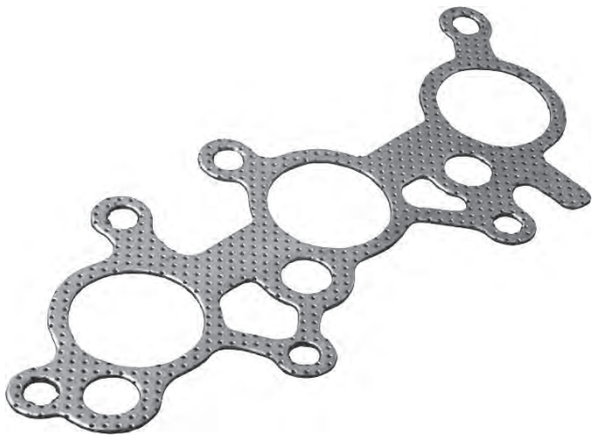

OEM

17173-31050

Bolt Holes

6

Interchanges

Fel Pro:	MS97235
Mahle US:	
Victor Reinz:	71-54138-00
Glaser:	X82532-01
Elring-Klinger:	

Notes:

TOYOTA

MG914 — V6 Cylinder

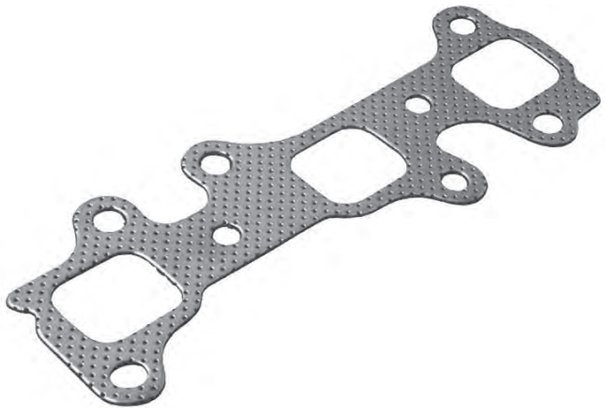

OEM

17173-62040

Bolt Holes

8

Interchanges

Fel Pro:	MS95405
Mahle US:	MS16075
Victor Reinz:	71-53571-00
Glaser:	X82286-01
Elring-Klinger:	

Notes:

TOYOTA

MG915 — V6 Cylinder

OEM

17173-62050
17173-62060

Bolt Holes

6

Interchanges

Fel Pro:	MS92732
Mahle US:	MS16263
Victor Reinz:	
Glaser:	
Elring-Klinger:	

Notes:

TOYOTA

MG1005 — V6 Cylinder

OEM

17173-0P010
17173-31010

Bolt Holes

6

Interchanges

Fel Pro:	MS96614
Mahle US:	MS19550
Victor Reinz:	71-54126-00
Glaser:	X59530-01
Elring-Klinger:	

Notes:

TOYOTA

MG1008 — V6 Cylinder

OEM

17173-0P020

Bolt Holes

6

Interchanges

Fel Pro:	MS96795
Mahle US:	MS19722
Victor Reinz:	
Glaser:	
Elring-Klinger:	

Notes:

TOYOTA

MG908 — V8 Cylinder

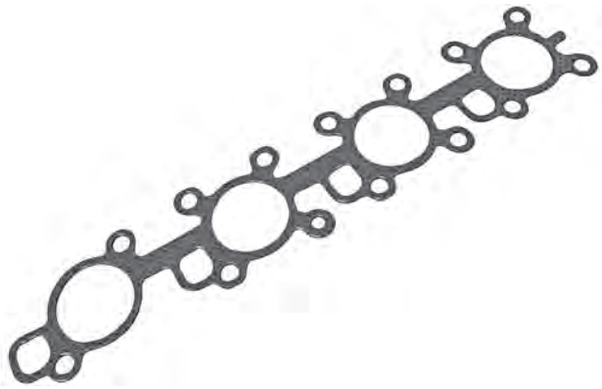

OEM

17173-38020

Bolt Holes

14

Interchanges

Fel Pro:	MS97029
Mahle US:	MS19731
Victor Reinz:	
Glaser:	
Elring-Klinger:	

Notes:

TOYOTA

MG912 — V8 Cylinder

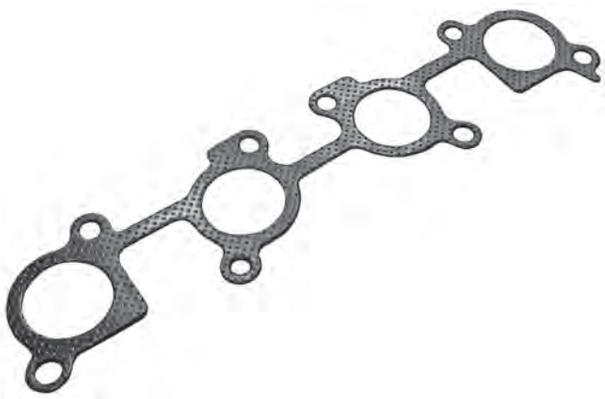

OEM

17173-50020

17173-50021

Bolt Holes

8

Interchanges

Fel Pro:	MS95439
Mahle US:	MS19217
Victor Reinz:	
Glaser:	
Elring-Klinger:	

Notes:

TOYOTA

MG929 — V8 Cylinder

OEM

17198-50010

Bolt Holes

8

Interchanges

Fel Pro:	MS96701
Mahle US:	MS19217
Victor Reinz:	
Glaser:	
Elring-Klinger:	

Notes:

TOYOTA

MG8993 — V8 Cylinder

OEM

17173-50030

Bolt Holes

12

Interchanges

Fel Pro:	MS96701
Mahle US:	MS19217
Victor Reinz:	
Glaser:	
Elring-Klinger:	

Notes:

VOLKSWAGEN

MG415 — L3 Cylinder

OEM

058 253 306L
058 253 039G
058 253 039L
058 253 039E

Bolt Holes

13

Interchanges

Fel Pro:	MS96116
Mahle US:	MS19233
Victor Reinz:	71-31958-00
Glaser:	X51632-01
Elring-Klinger:	148.19

Notes:

VOLKSWAGEN

MG416 — L3 Cylinder

OEM

045 253 039

Bolt Holes

6

Interchanges

Fel Pro:	
Mahle US:	
Victor Reinz:	71-34217-00
Glaser:	X52968-01
Elring-Klinger:	530.8

Notes:

VOLKSWAGEN

MG950 — L3 Cylinder

OEM

034 253 039E

03D 253 039B

Bolt Holes

7

Interchanges

Fel Pro:	
Mahle US:	
Victor Reinz:	71-36101-00
Glaser:	X81435-01
Elring-Klinger:	744.321

Notes:

VOLKSWAGEN

MG414 — L4 Cylinder

OEM

030 129 717D

Bolt Holes

8

Interchanges

Fel Pro:	
Mahle US:	
Victor Reinz:	71-26279-20
Glaser:	X03745-01
Elring-Klinger:	671.7

Notes: Intake Manifold Gasket

VOLKSWAGEN

MG415 — L4 Cylinder

OEM

058 253 306L

058 253 039G

Bolt Holes

13

Interchanges

Fel Pro:	MS96116
Mahle US:	MS19233
Victor Reinz:	71-31958-00
Glaser:	X51632-01
Elring-Klinger:	148.19

Notes:

VOLKSWAGEN

MG420 — L4 Cylinder

OEM

048 129 717D

Bolt Holes

6

Interchanges

Fel Pro:	
Mahle US:	
Victor Reinz:	71-31856-00
Glaser:	X86258-01
Elring-Klinger:	146.77

Notes: Intake Manifold Gasket

VOLKSWAGEN

MG421 — L4 Cylinder

OEM

030 253 039A

030 129 585B

030 129 585

Bolt Holes

3

Interchanges

Fel Pro:	
Mahle US:	
Victor Reinz:	71-27476-00
Glaser:	X51580-01
Elring-Klinger:	750.23

Notes: 2 Required

VOLKSWAGEN

MG422 — L4 Cylinder

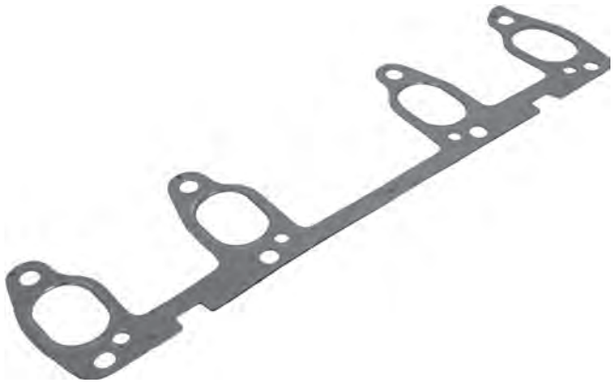

OEM

037 253 039D

037 253 039

Bolt Holes

12

Interchanges

Fel Pro:	MS97196
Mahle US:	MS18396
Victor Reinz:	71-31957-00
Glaser:	X51638-0
Elring-Klinger:	625.76

Notes:

VOLKSWAGEN

MG423 — L4 Cylinder

OEM

036 253 039F

036 253 039C

Bolt Holes

9

Interchanges

Fel Pro:	
Mahle US:	
Victor Reinz:	71-34206-00
Glaser:	X51579-01
Elring-Klinger:	135.23

Notes:

VOLKSWAGEN

MG676 — L4 Cylinder

OEM

00A 253 039

Bolt Holes

13

Interchanges

Fel Pro:	
Mahle US:	
Victor Reinz:	71-33174-00
Glaser:	X51359-01
Elring-Klinger:	921.408

Notes:

VOLKSWAGEN

MG893 — L4 Cylinder

OEM

J17-177-540-21

Bolt Holes

8

Interchanges

Fel Pro:	
Mahle US:	
Victor Reinz:	71-52982-00
Glaser:	X82383-01
Elring-Klinger:	

Notes:

VOLKSWAGEN

MG951 — L4 Cylinder

OEM

030 253 039A

030 253 039H

Bolt Holes

8

Interchanges

Fel Pro:	
Mahle US:	
Victor Reinz:	71-34218-00
Glaser:	X51580-01
Elring-Klinger:	

Notes:

VOLKSWAGEN

MG953 — L4 Cylinder

OEM

06B 253 039E

Bolt Holes

12

Interchanges

Fel Pro:	
Mahle US:	
Victor Reinz:	71-34214-00
Glaser:	X81686-01
Elring-Klinger:	744.321

Notes:

VOLKSWAGEN

MG966 — L4 Cylinder

OEM

06F 253 039E

06F 253 039F

Bolt Holes

8

Interchanges

Fel Pro:	MS96784
Mahle US:	MS19407
Victor Reinz:	71-37511-00
Glaser:	X81829-01
Elring-Klinger:	150.86

Notes:

VOLKSWAGEN

MG969 — L4 Cylinder

OEM

03L 253 039B
03G 253 039

Bolt Holes

8

Interchanges

Fel Pro:	
Mahle US:	
Victor Reinz:	71-38428-00
Glaser:	X81685-01
Elring-Klinger:	477.64

Notes:

VOLKSWAGEN

MG975 — L4 Cylinder

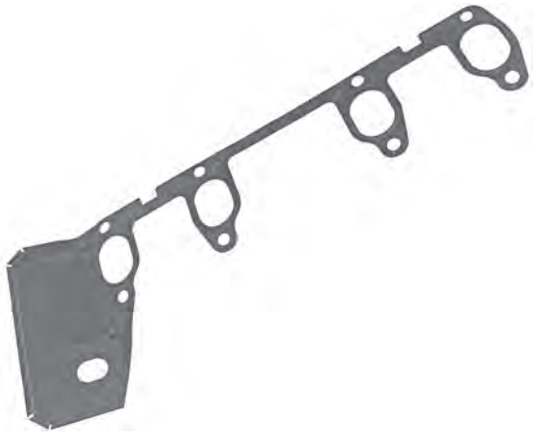

OEM

03G 253 039F
03G 253 039A

Bolt Holes

8

Interchanges

Fel Pro:	
Mahle US:	MS19395
Victor Reinz:	71-85337-00
Glaser:	X81833-01
Elring-Klinger:	

Notes:

VOLKSWAGEN

MG410 — L5 Cylinder

OEM

07K 253 039C

Bolt Holes

15

Interchanges

Fel Pro:	MS97034
Mahle US:	MS19368
Victor Reinz:	71-37499-00
Glaser:	X81830-01
Elring-Klinger:	470.761

Notes:

VOLKSWAGEN

MG967 — L5 Cylinder

OEM

028 129 589B

026 129 589A

Bolt Holes

2

Interchanges

Fel Pro:	MS94063
Mahle US:	MS10030
Victor Reinz:	71-27898-20
Glaser:	X03747-01
Elring-Klinger:	815.187

Notes: 5 Required

VOLKSWAGEN

MG970 — V6 Cylinder

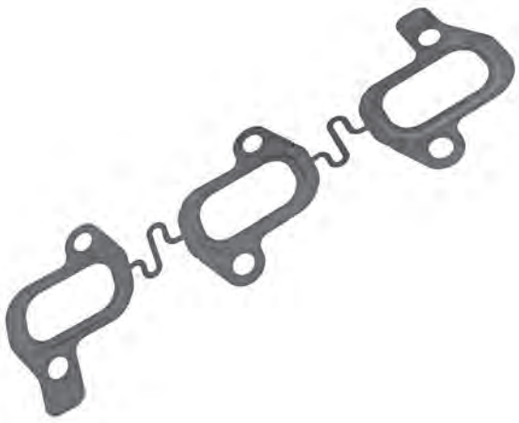

OEM

059 253 039D

Bolt Holes

6

Interchanges

Fel Pro:	
Mahle US:	
Victor Reinz:	71-36117-00
Glaser:	X81941-01
Elring-Klinger:	148.271

Notes: 2 Required

VOLKSWAGEN

MG974 — V6 Cylinder

OEM

03H 253 039E

Bolt Holes

6

Interchanges

Fel Pro:	
Mahle US:	
Victor Reinz:	71-37501-00
Glaser:	X81832-01
Elring-Klinger:	150.902

Notes:

VOLKSWAGEN

MG4301 — V6 Cylinder

OEM

7B0 253 039A

Bolt Holes

5

Interchanges

Fel Pro:	MS97197
Mahle US:	MS19877
Victor Reinz:	71-10413-00
Glaser:	X90058-01
Elring-Klinger:	

Notes:

VOLKSWAGEN

MG955 — V8 Cylinder

OEM

077 253 039C

Bolt Holes

12

Interchanges

Fel Pro:	
Mahle US:	MS19568
Victor Reinz:	71-34094-00
Glaser:	X52312-01
Elring-Klinger:	530.93

Notes:

VOLKSWAGEN

MG986 — V10 Cylinder

OEM

07Z 253 039D

Bolt Holes

10

Interchanges

Fel Pro:	
Mahle US:	
Victor Reinz:	71-36112-00
Glaser:	X81949-01
Elring-Klinger:	17.95

Notes: 2 Required

VOLKSWAGEN

MG972 — W8 Cylinder

OEM

07D 253 039A

Bolt Holes

11

Interchanges

Fel Pro:	
Mahle US:	
Victor Reinz:	71-36094-00
Glaser:	X81942-01
Elring-Klinger:	743-760

Notes: 2 Required

VOLKSWAGEN

MG971 — W12 Cylinder

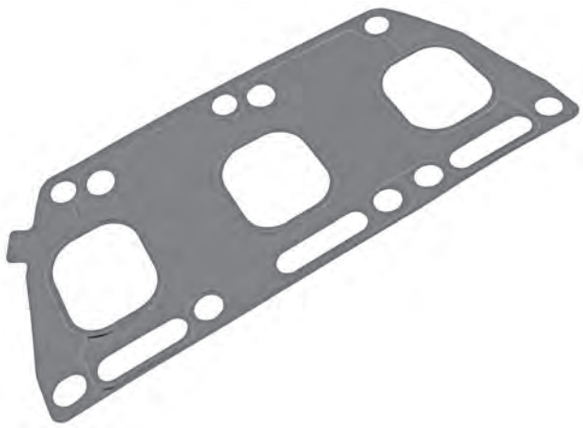

OEM

07C 253 039D

Bolt Holes

10

Interchanges

Fel Pro:	
Mahle US:	
Victor Reinz:	71-36107-00
Glaser:	X81983-01
Elring-Klinger:	710.802

Notes:

VOLVO

MG464 — L4 Cylinder

OEM

3068133-0

Bolt Holes

5

Interchanges

Fel Pro:	
Mahle US:	
Victor Reinz:	71-36553-10
Glaser:	X87773-01
Elring-Klinger:	337.81

Notes:

VOLVO

MG703 — L4 Cylinder

OEM

30875138

Bolt Holes

9

Interchanges

Fel Pro:	MS95314	
Mahle US:	MS16278	
Victor Reinz:	71-53161-00	71-52908-00
Glaser:	X82253-01	X82224-01
Elring-Klinger:	34.62	

Notes:

VOLVO

MG783 — L4 Cylinder

OEM

8653687

Bolt Holes

9

Interchanges

Fel Pro:	
Mahle US:	
Victor Reinz:	71-33223-00
Glaser:	X81070-01
Elring-Klinger:	156.77

Notes: Intake & Exhaust Gasket

VOLVO

MG811 — L4 Cylinder

OEM

3101048-1
3101048
3213443
3213443-9

Bolt Holes

8

Interchanges

Fel Pro:		
Mahle US:		
Victor Reinz:	71-22789-20	
Glaser:	X05931-1	X05829-1
Elring-Klinger:	214.416	

Notes: Intake & Exhaust Gasket

VOLVO

MG967

L4 Cylinder

OEM

9180610
9180611
3547615-9

Bolt Holes

2

Interchanges

Fel Pro:	
Mahle US:	
Victor Reinz:	71-27898-20
Glaser:	X03747-01
Elring-Klinger:	815.187

Notes: 4 Required

NOTES

CONVERTER - MUFFLER - EXHAUST PIPE GASKETS

DESIGN STYLE 1

2 Hole Flat With or Without Metal Grommet

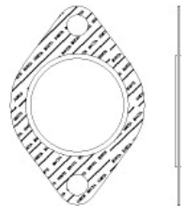

Material

Clinched Composite
Clinched Graphite
Tin Plate

DESIGN STYLE 2

2 Hole Flat With Ring Seal

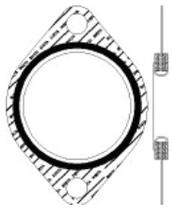

Material

Tin Plate Body With
Clinched Composite or
Clinched Graphite Ring Seal

DESIGN STYLE 3

2 Hole Flat With Washer

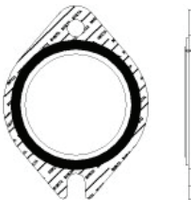

Material

Clinched Composite Body With
Clinched Composite or
Clinched Graphite Ring Seal

DESIGN STYLE 4

Metal O-Ring Seal

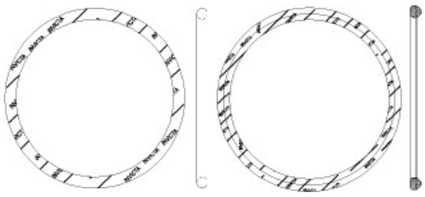

Material

DESIGN STYLE 5

Ring Seal

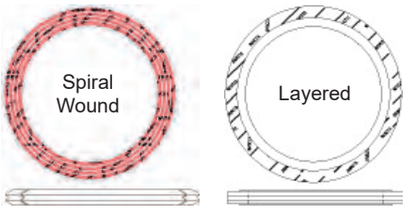

Material

Clinched
Composite or
Clinched
Graphite

DESIGN STYLE 6

Donut Ring Seal

Material

Sintered Metal or Steel

DESIGN STYLE 7

1/2 Donut Ring Seal Without Metal Insert

Material

Clinched Composite
Clinched Graphite
Sintered Metal
Wire Mesh
Wire Mesh With Graphite, Mica,
Vermiculite or SS Foil

DESIGN STYLE 8

1/2 Donut Ring Seal With Metal Insert

Material

Clinched Composite
Clinched Graphite
Sintered Metal
Wire Mesh
Wire Mesh With Graphite, Mica,
Vermiculite or SS Foil

DESIGN STYLE 9

Donut Ring Seal

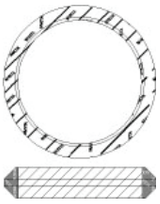

Material

Clinched Composite
Clinched Graphite
Sintered Metal
Wire Mesh
Wire Mesh With Graphite, Mica,
Vermiculite or SS Foil

DESIGN STYLE 10

4 Hole Flat With or Without Metal Grommet

Material

Clinched Composite
Clinched Graphite
Tin Plate

DESIGN STYLE 11

3 Hole Flat With or Without Metal Grommet

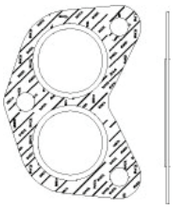

Material

Clinched Composite
Clinched Graphite
Tin Plate

DESIGN STYLE 12

3 Hole Flat With or Without Metal Grommet

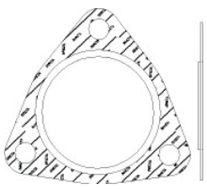

Material

Clinched Composite
Clinched Graphite
Tin Plate

CONVERTER - MUFFLER - EXHAUST PIPE GASKETS

DESIGN STYLE 13

3 Hole Flat With or Without Metal Grommet

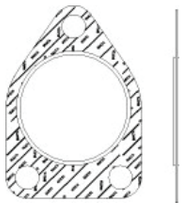

Material

Clinched Composite
Clinched Graphite
Tin Plate

DESIGN STYLE 14

3 Hole Flat With or Without Metal Grommet

Material

Clinched Composite
Clinched Graphite
Tin Plate

DESIGN STYLE 15

4 Hole Flat With or Without Metal Grommet

Material

Clinched Composite
Clinched Graphite
Tin Plate

DESIGN STYLE 16

Flat With or Without Metal Grommet

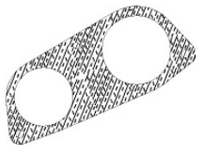

Material

Clinched Composite
Clinched Graphite
Tin Plate

DESIGN STYLE 17

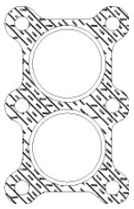

Material

Clinched Composite
Clinched Graphite
Tin Plate

DESIGN STYLE 18

Various Bolt Hole Configurations

Material

Clinched Composite
Clinched Graphite
Tin Plate

DESIGN STYLE 19

Miscellaneous Shapes

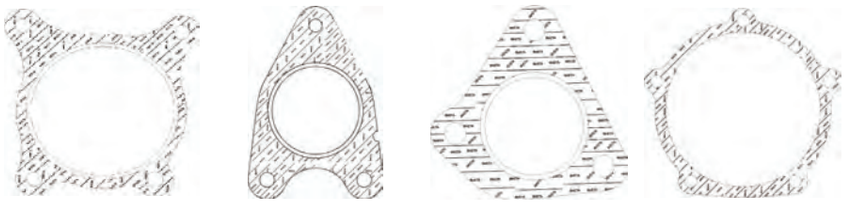

Material

Clinched Composite
Clinched Graphite
Tin Plate

Design Style	Pages
1	163 - 190
2	191 - 193
3	194 - 195
4	196 - 200
5	201 - 216
6	217 - 219
7	220 - 239
8	240 - 245

Design Style	Pages
9	246 - 252
10	253 - 262
11	263 - 271
12	272 - 295
13	296 - 297
14	298 - 300
15	301 - 304
16	305 - 306

Design Style	Pages
17	307
18	308 - 310
19	311 - 337

DESIGN STYLE 1

EGA185

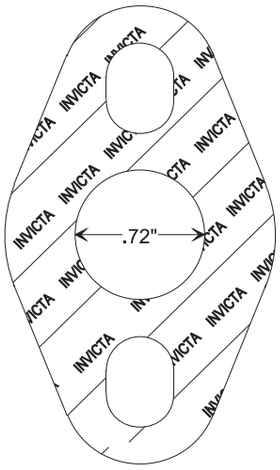

PERFORATED METAL WITH COMPOSITE CENTER

EGA802

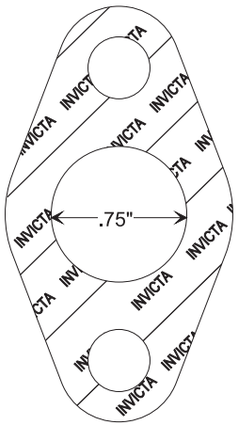

PERFORATED METAL WITH COMPOSITE CENTER

EGA276

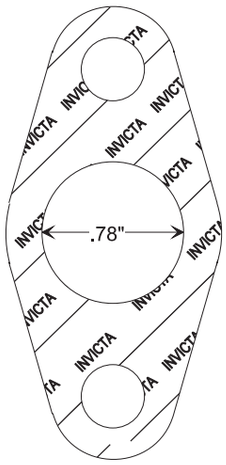

CLINCHED GRAPHITE MATERIAL

EGA889

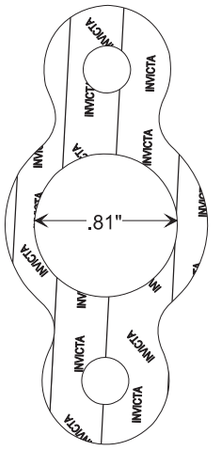

PERFORATED METAL WITH COMPOSITE CENTER

EGA622

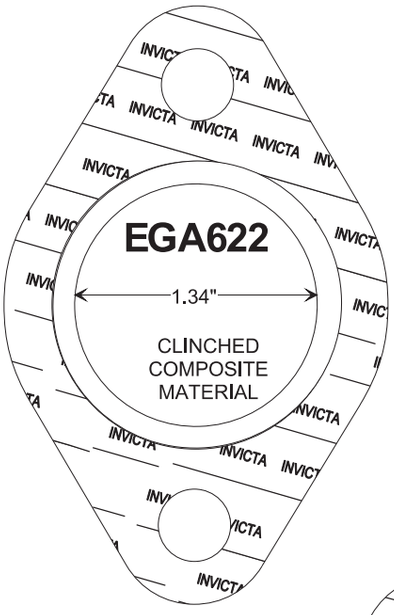

EGA746

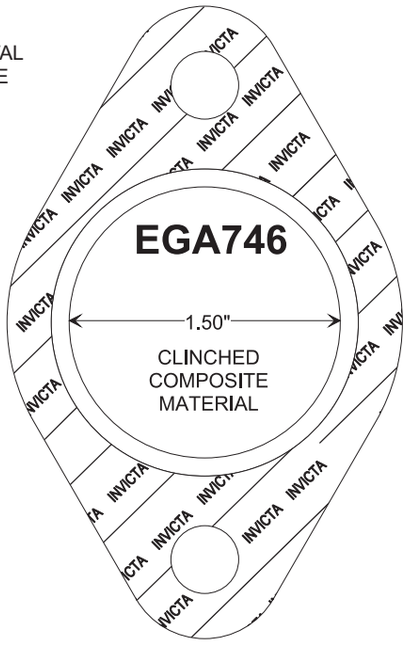

EGA621

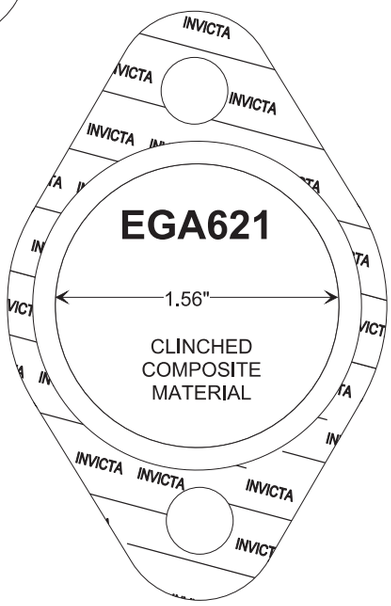

DESIGN STYLE 1

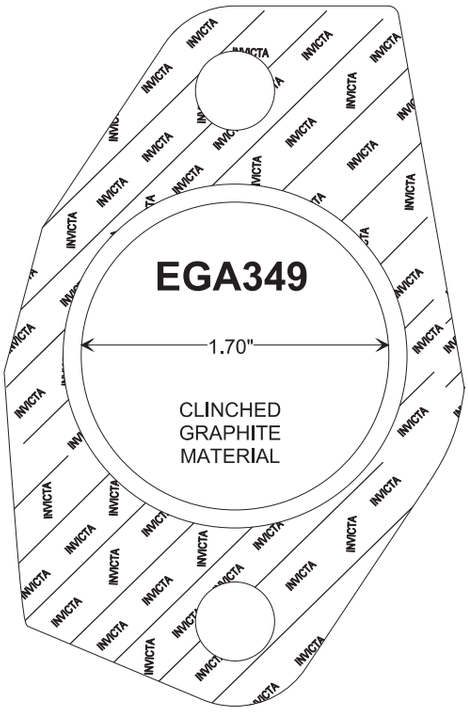

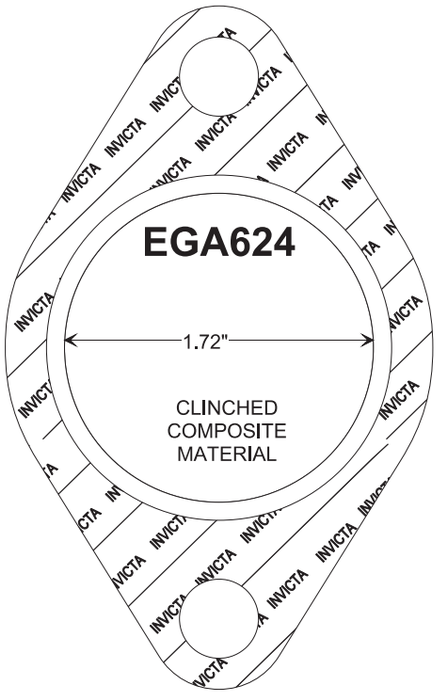

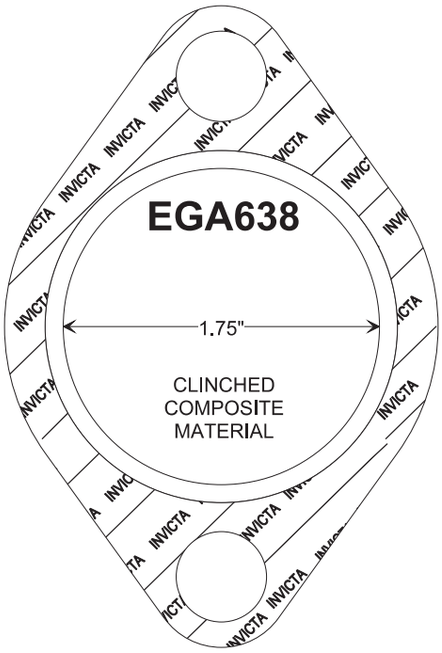

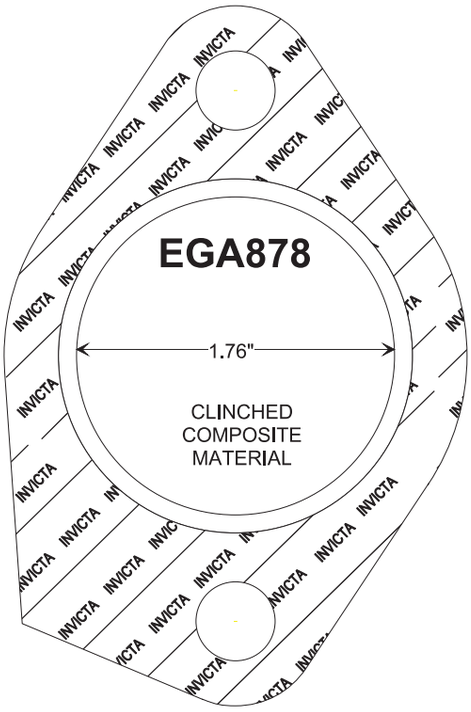

DESIGN STYLE 1

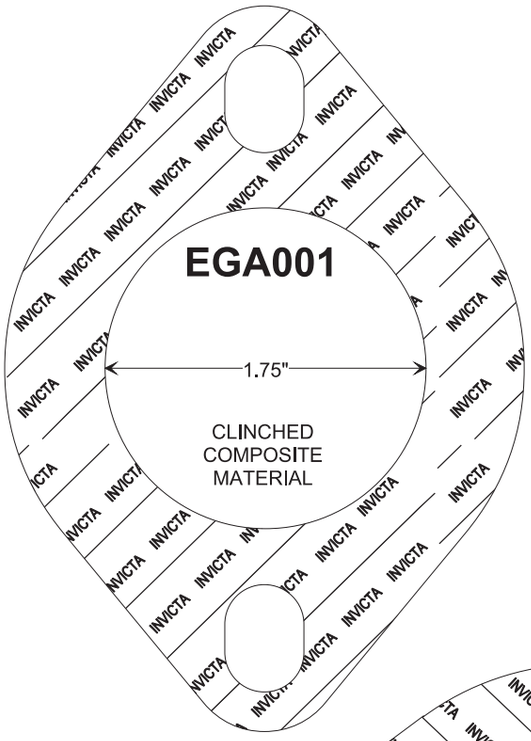

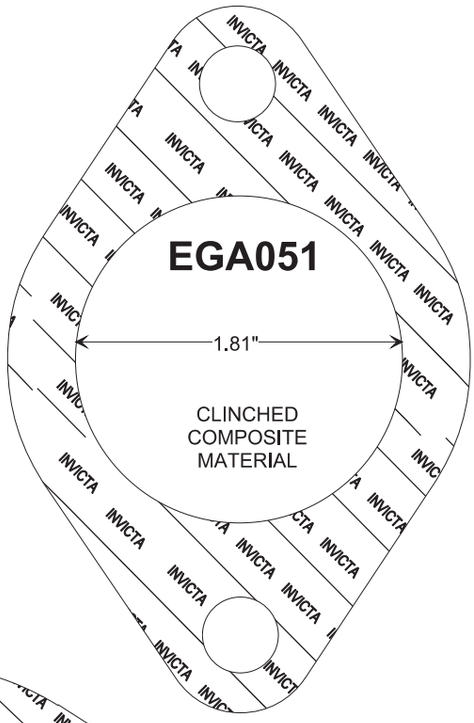

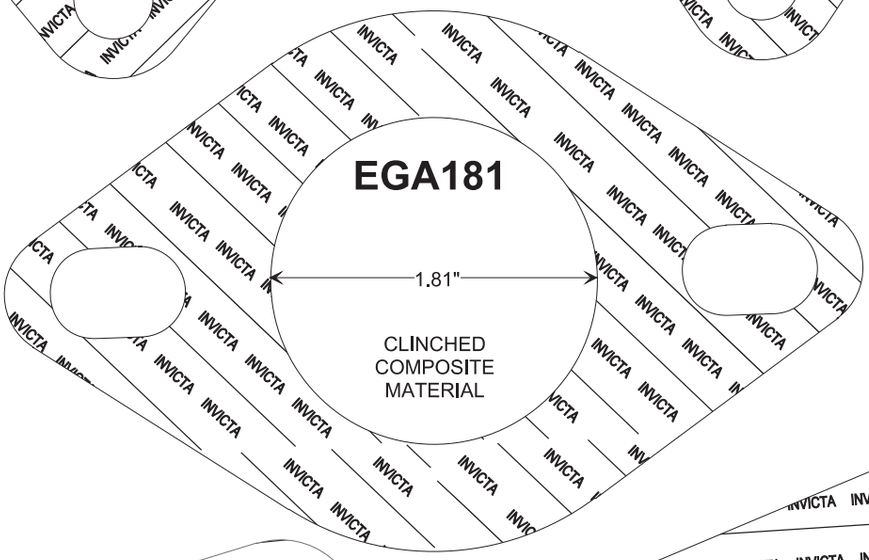

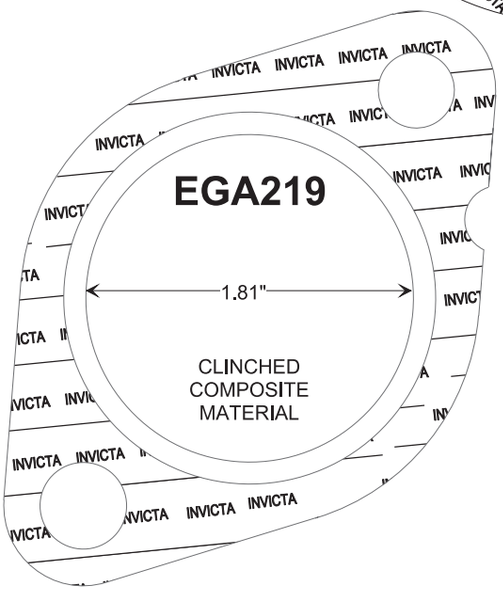

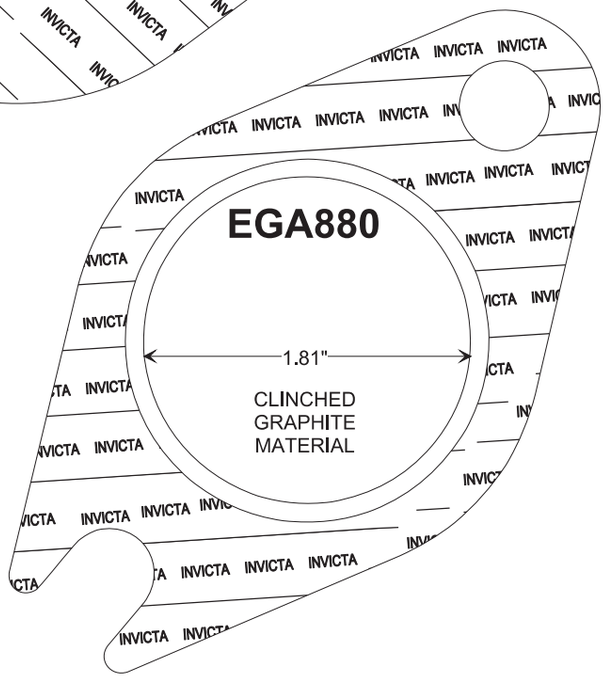

DESIGN STYLE 1

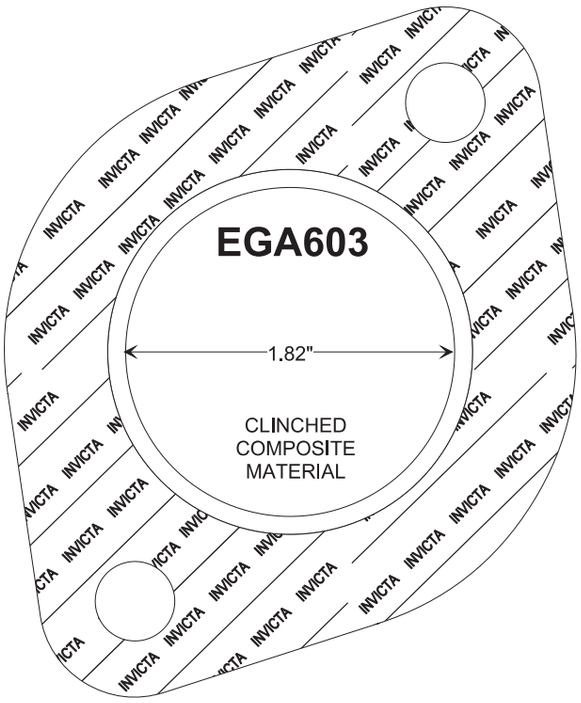

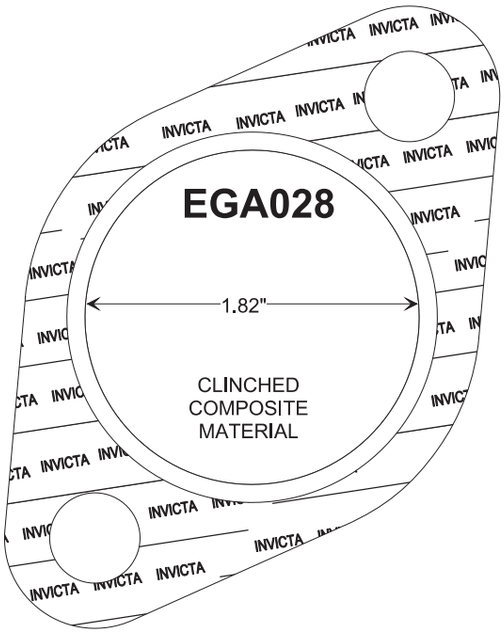

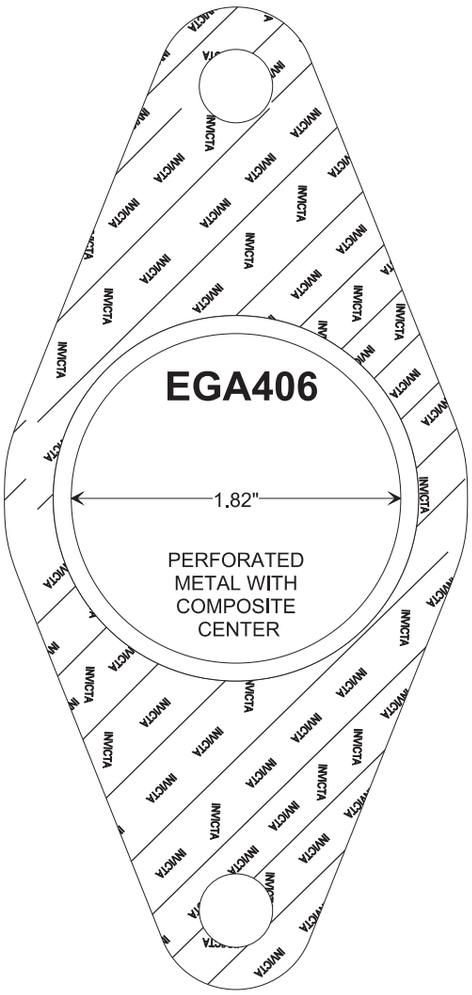

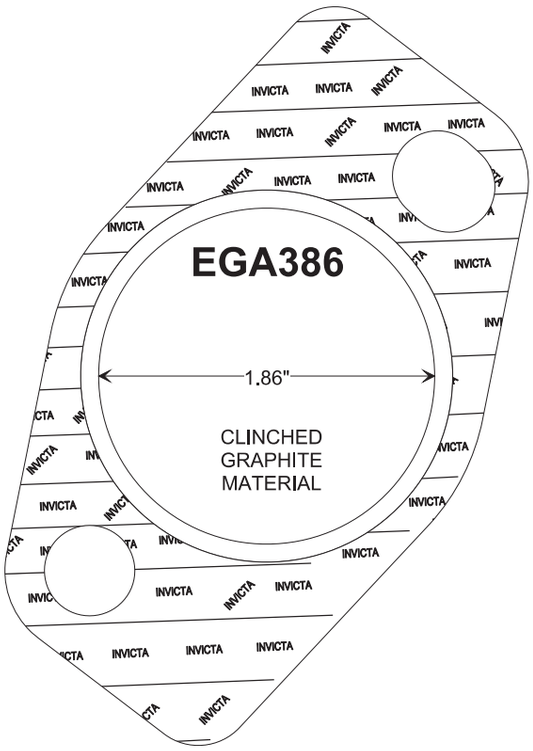

DESIGN STYLE 1

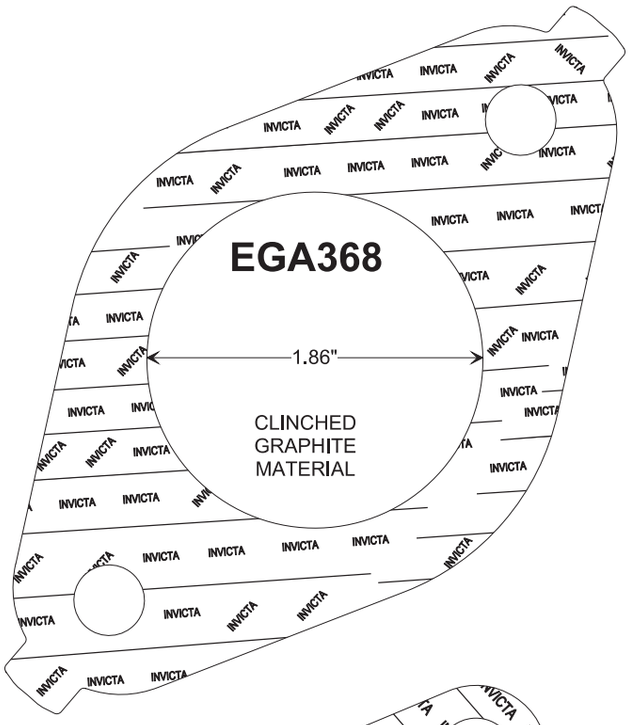

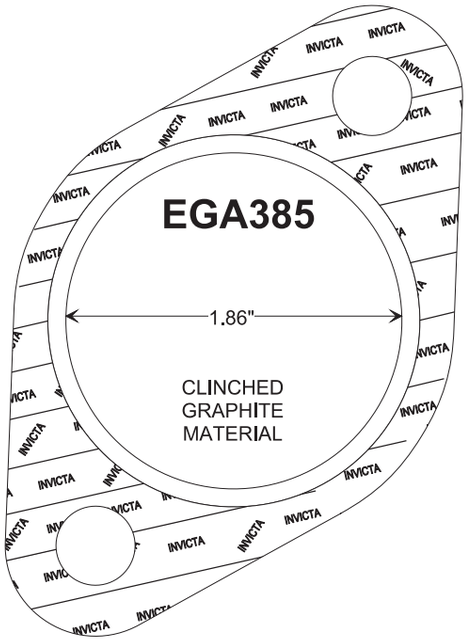

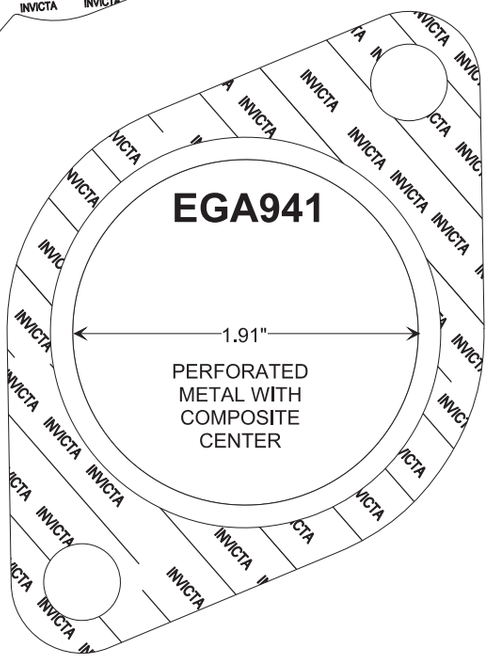

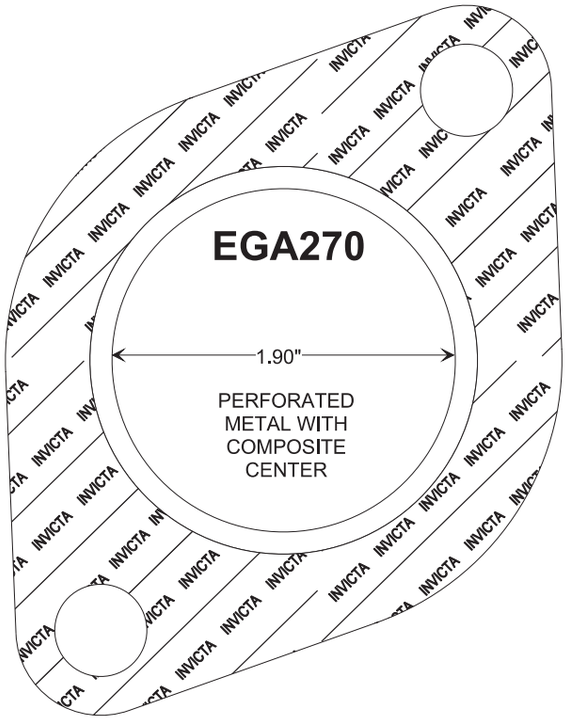

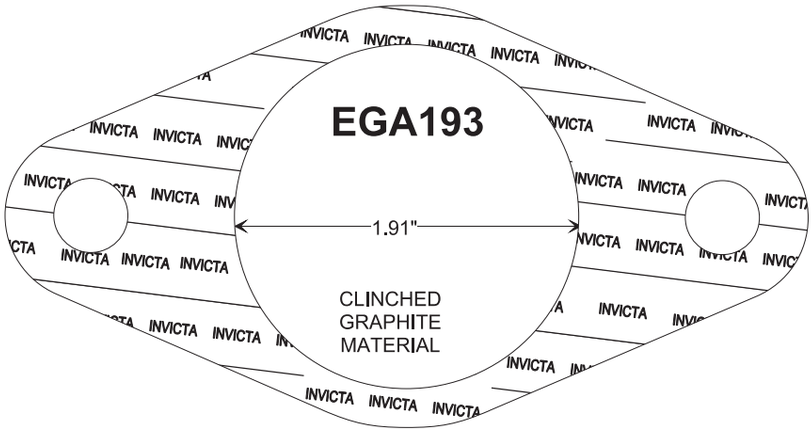

DESIGN STYLE 1

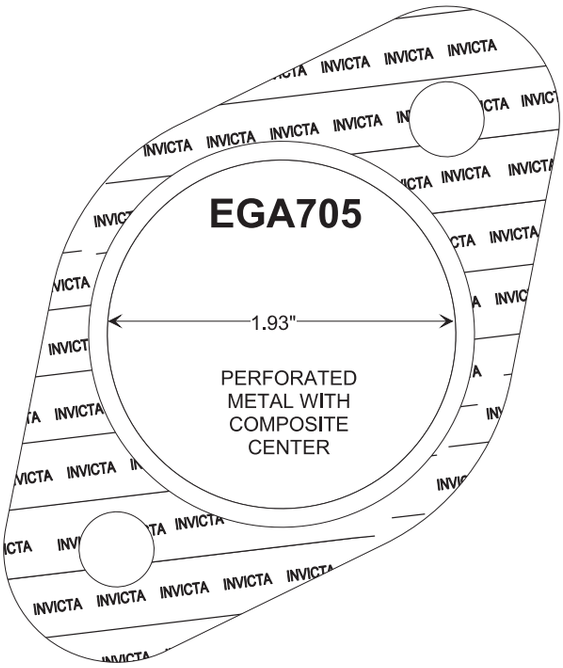

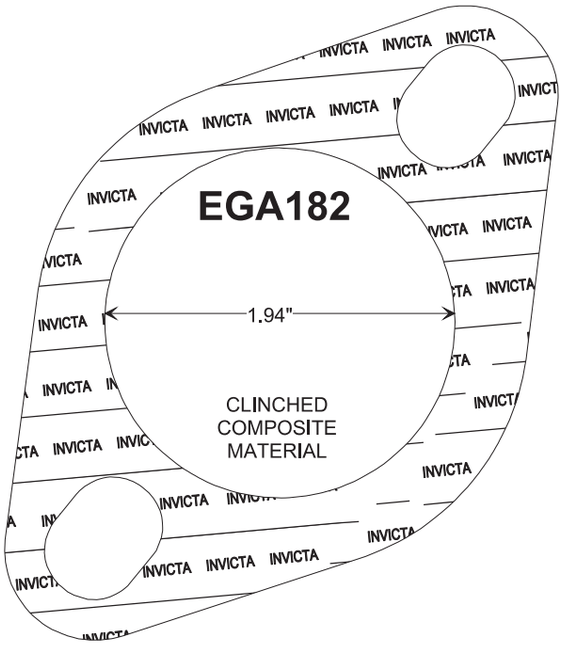

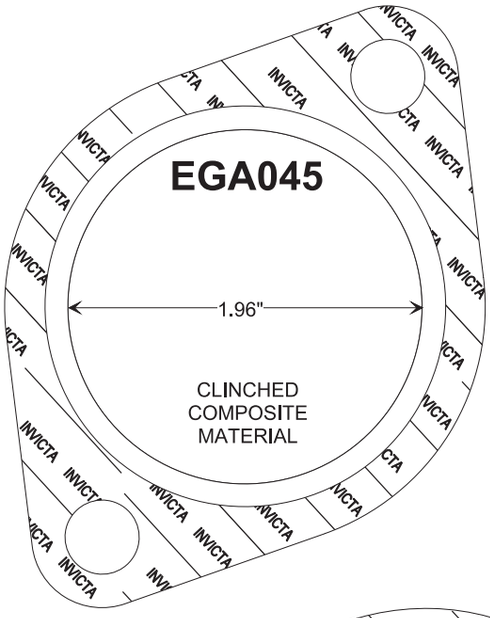

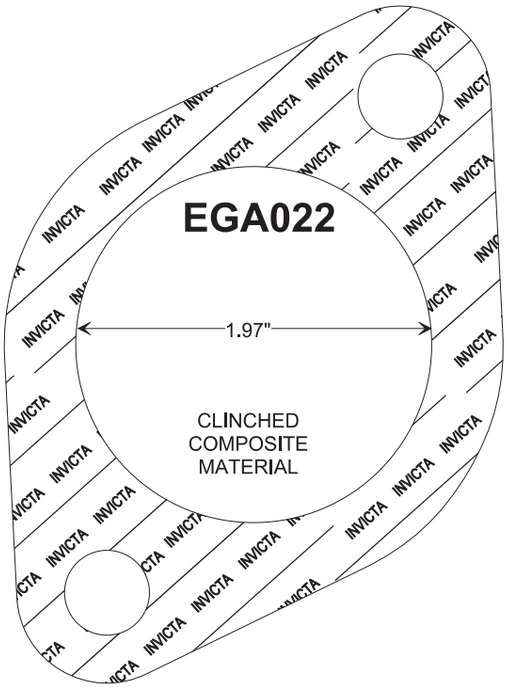

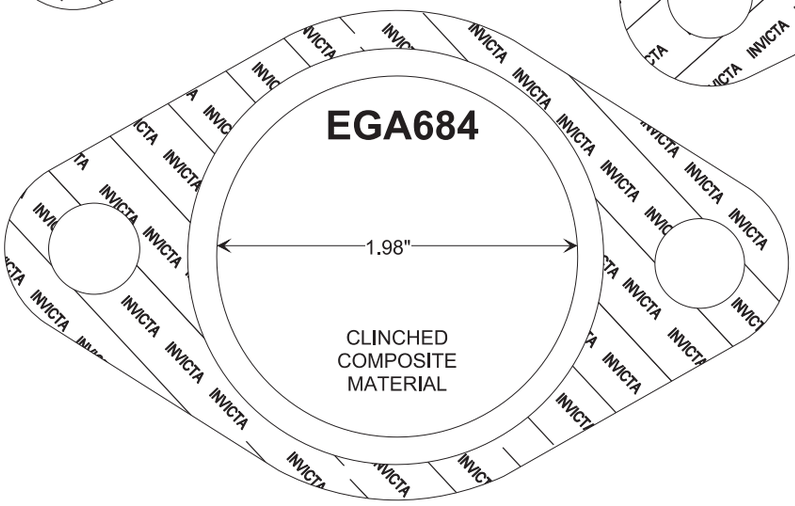

DESIGN STYLE 1

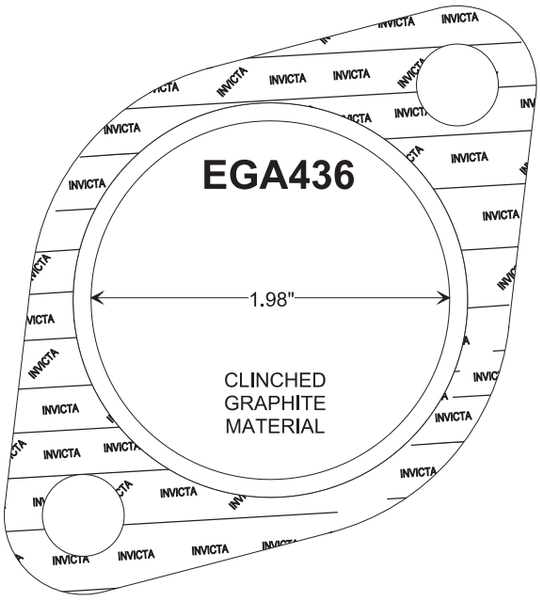

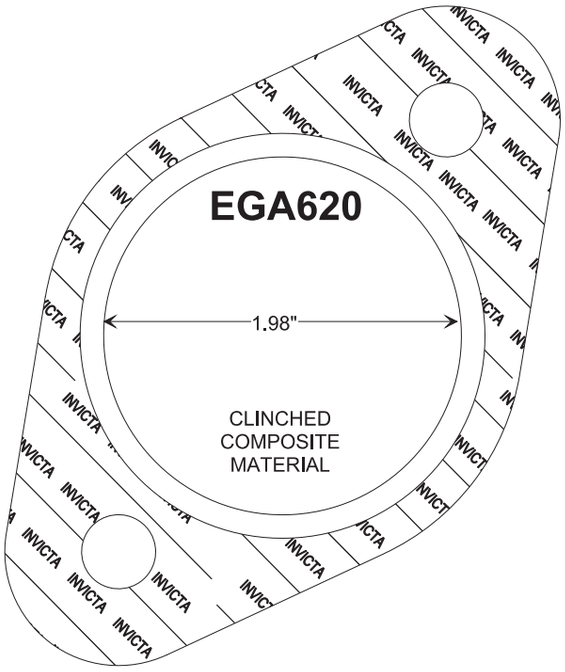

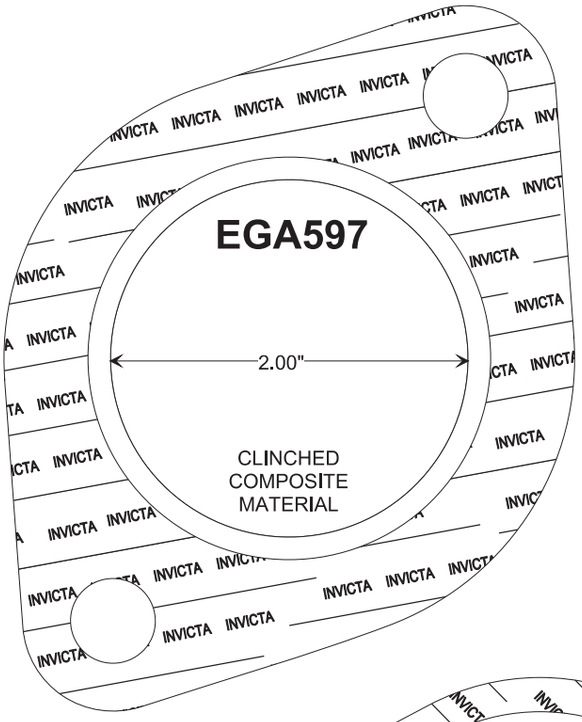

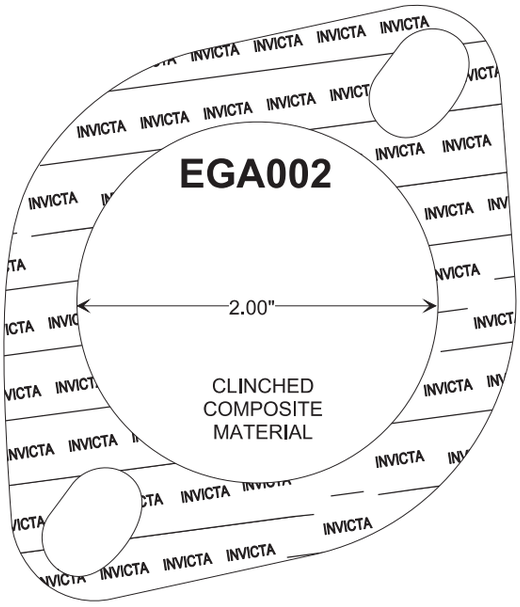

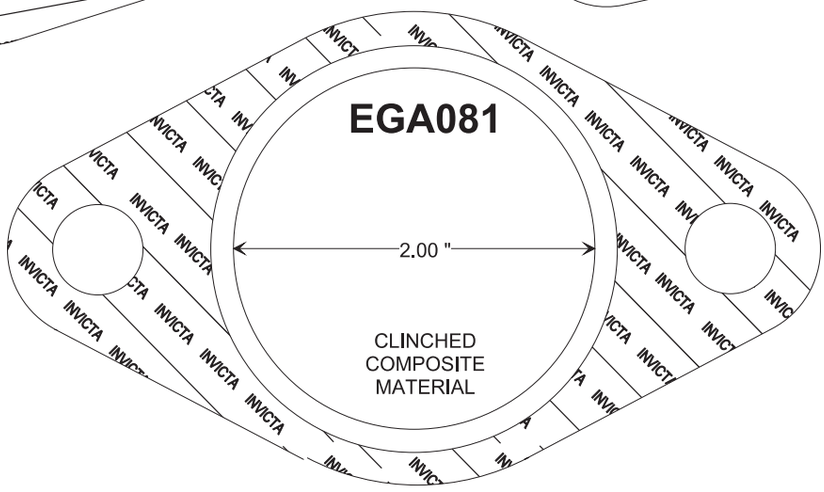

DESIGN STYLE 1

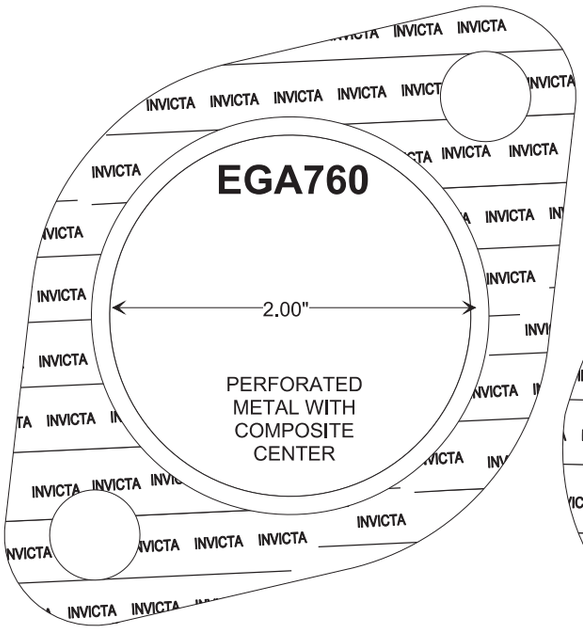

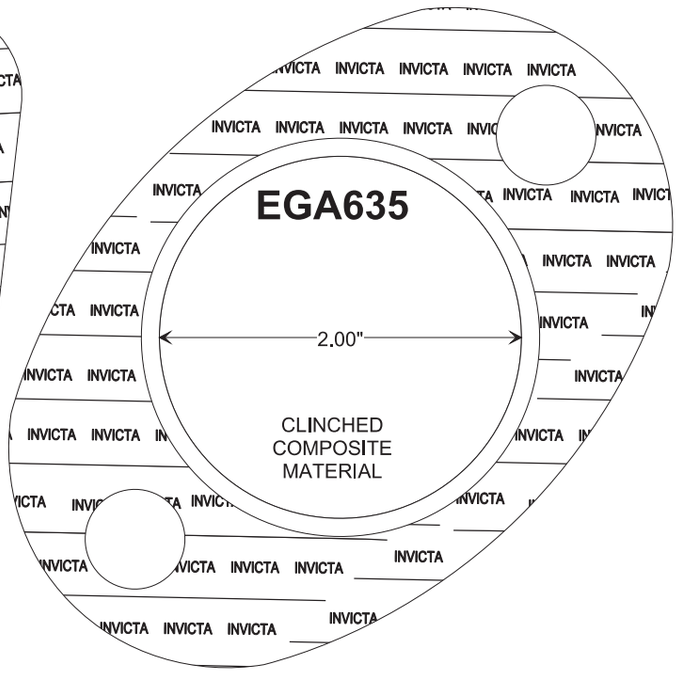

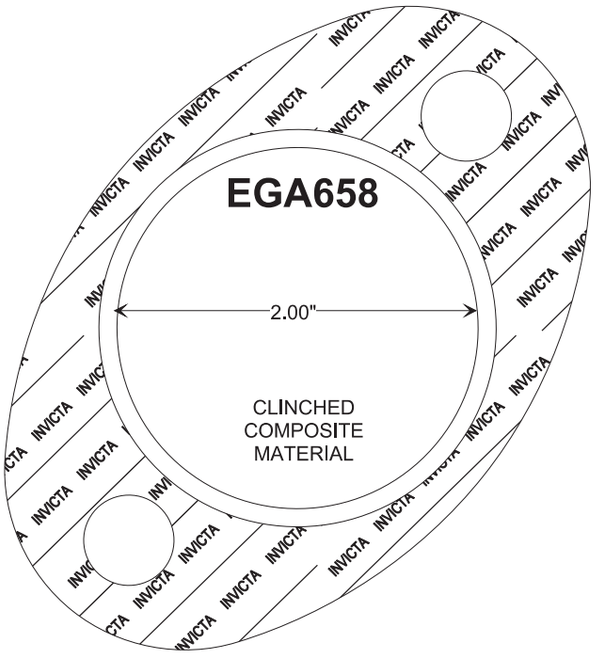

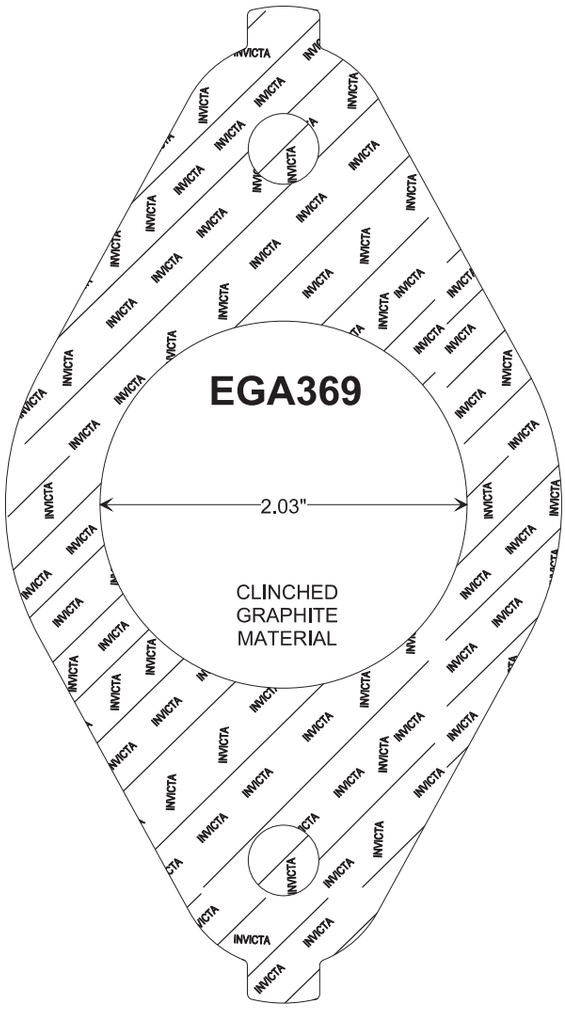

DESIGN STYLE 1

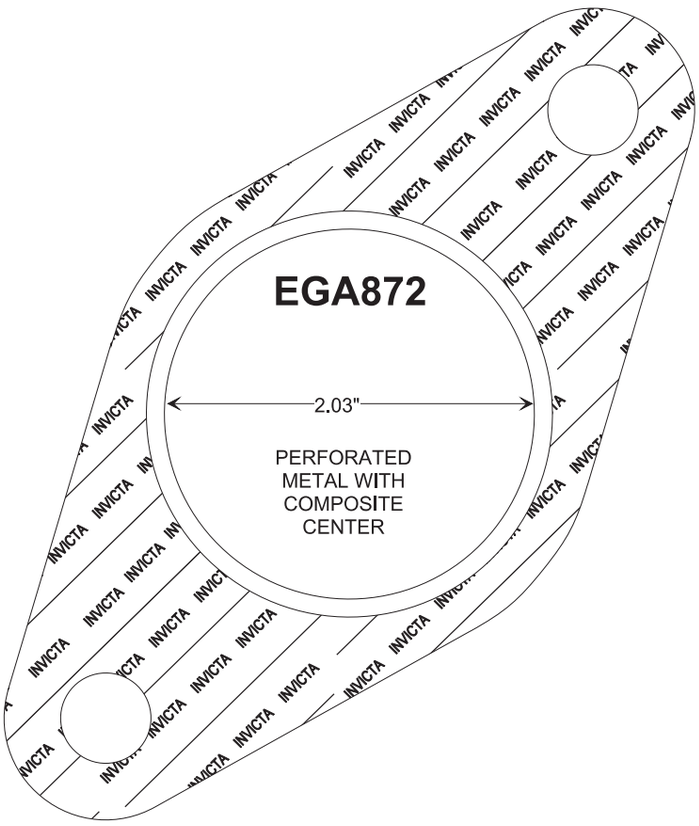

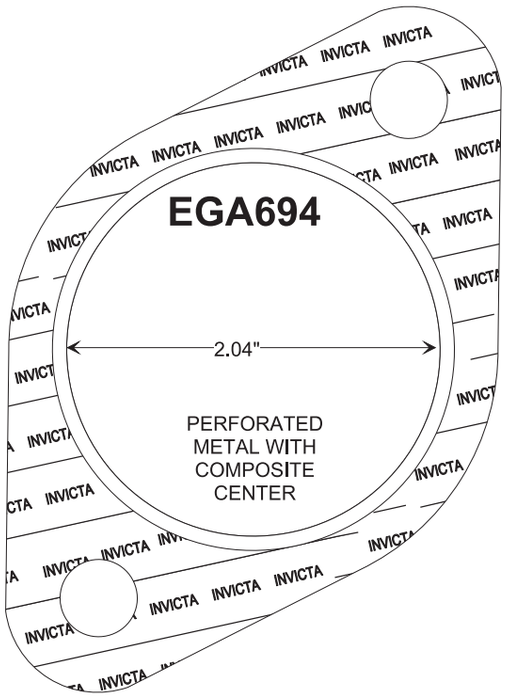

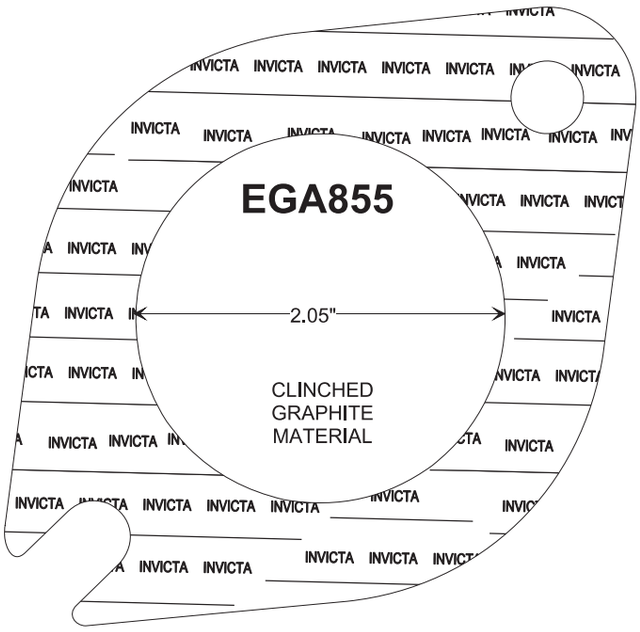

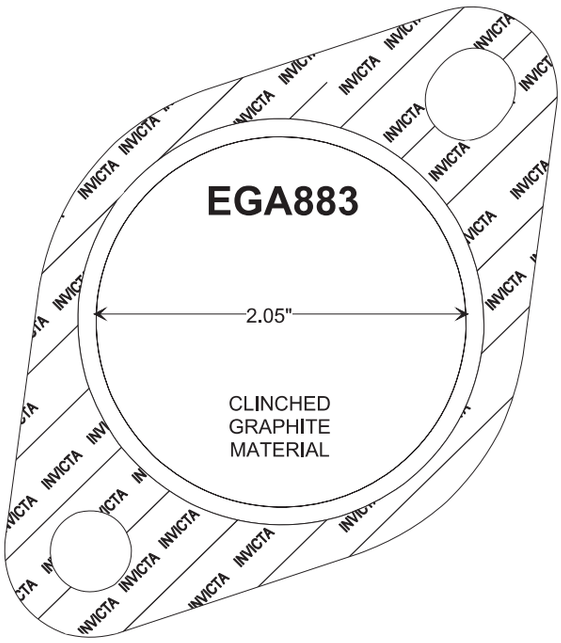

DESIGN STYLE 1

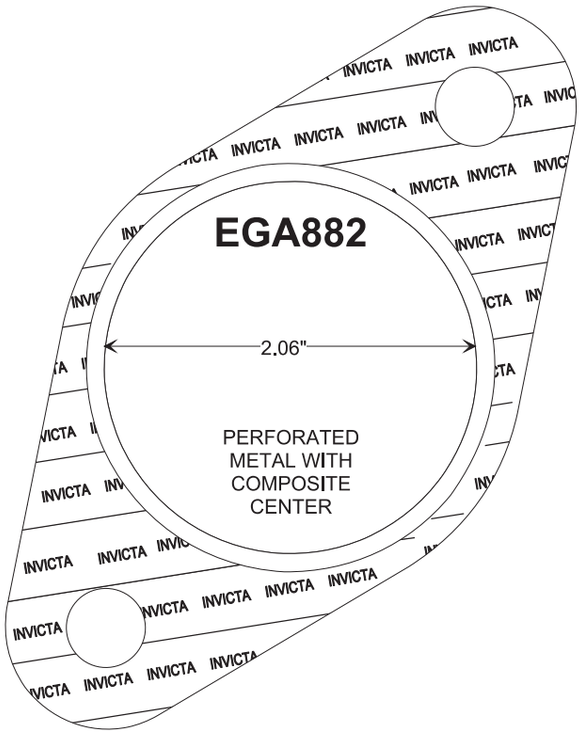

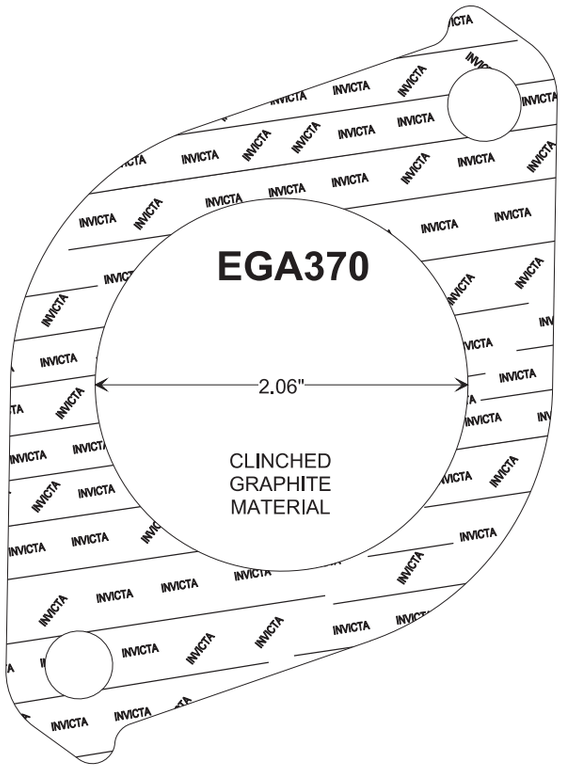

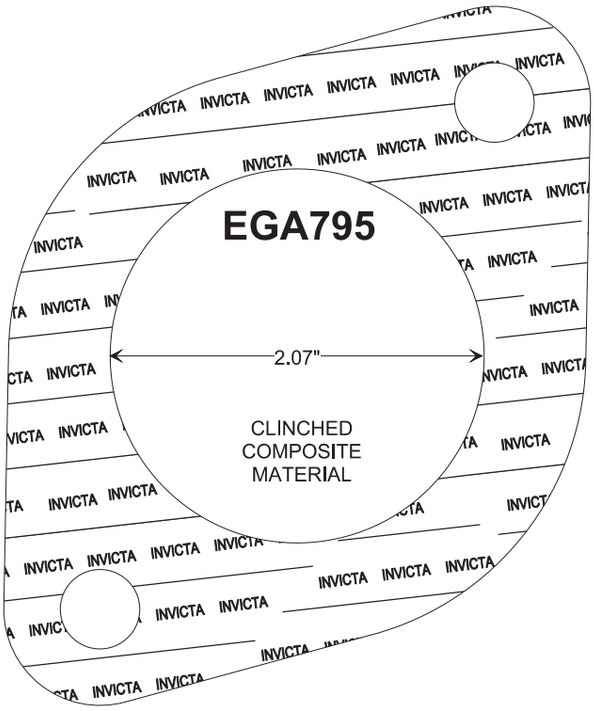

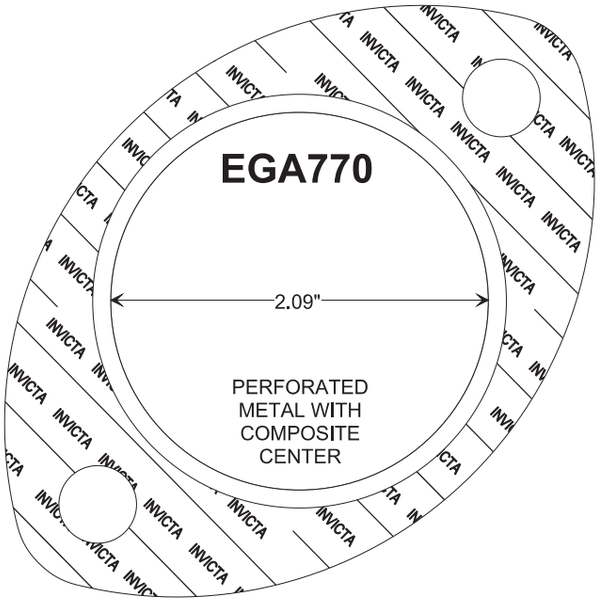

DESIGN STYLE 1

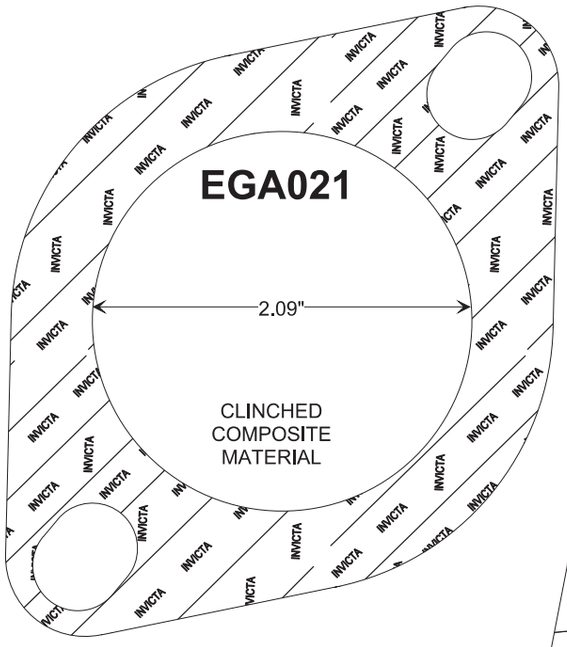

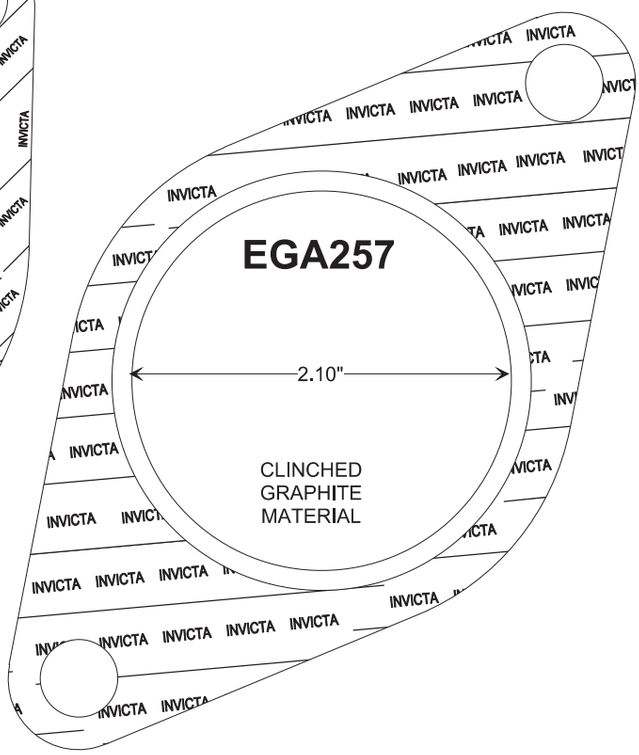

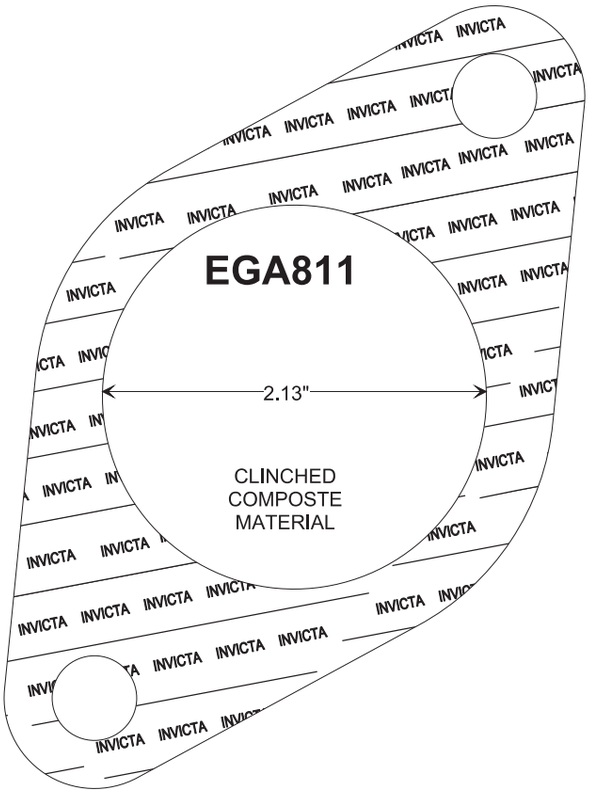

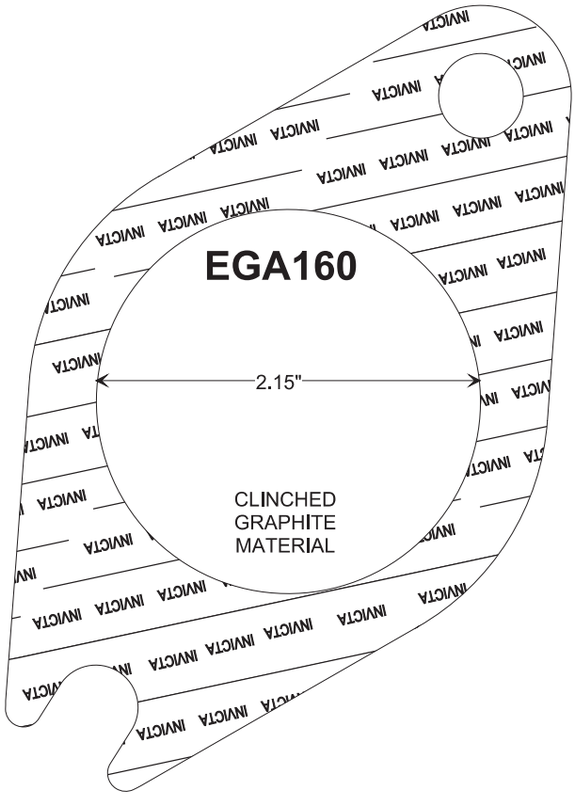

DESIGN STYLE 1

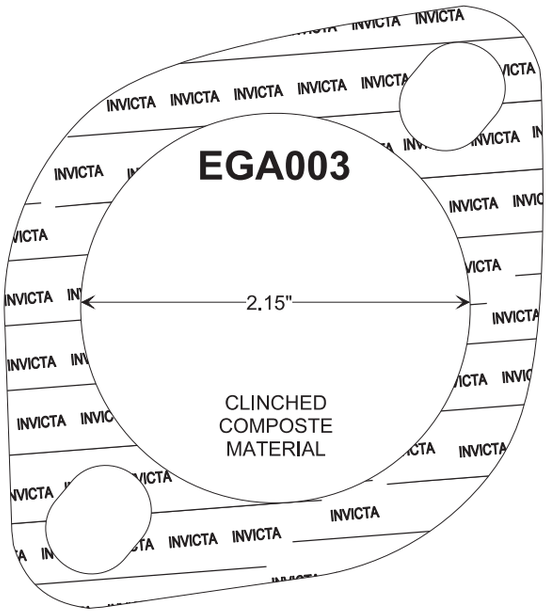

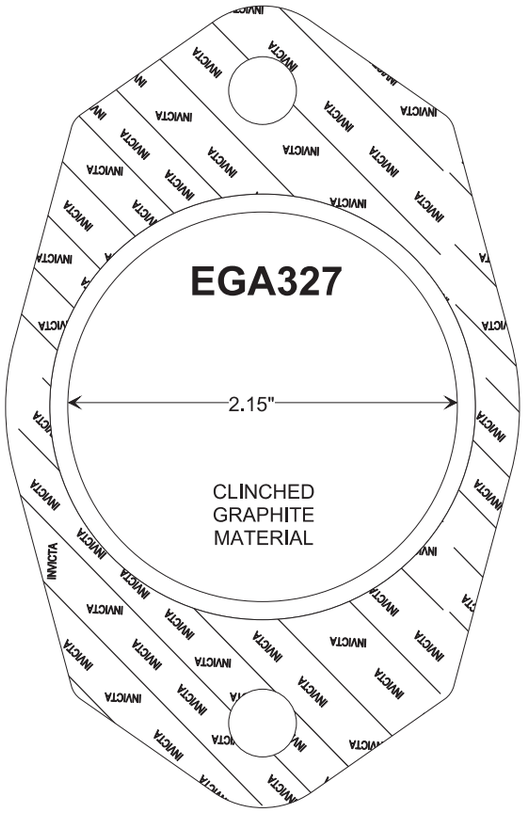

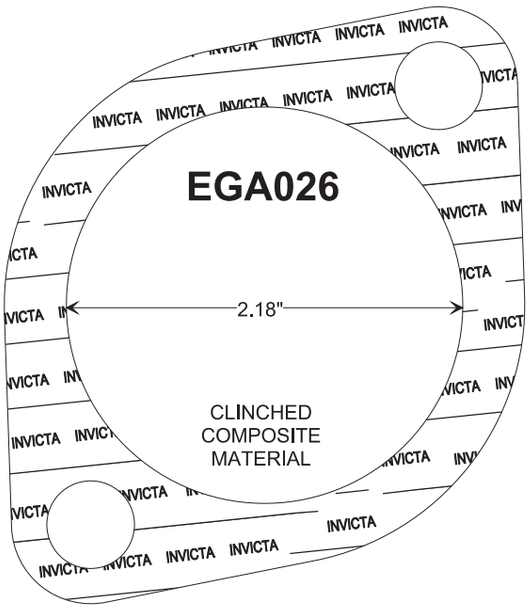

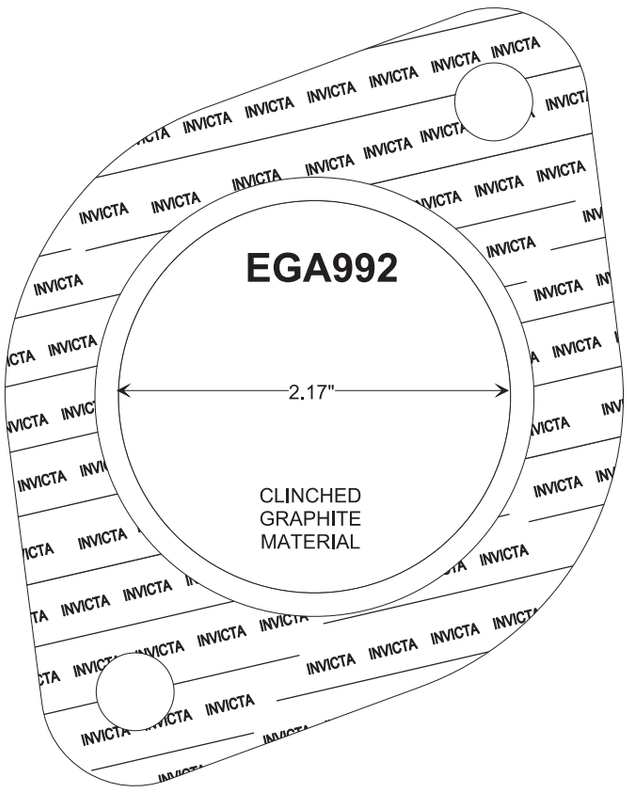

DESIGN STYLE 1

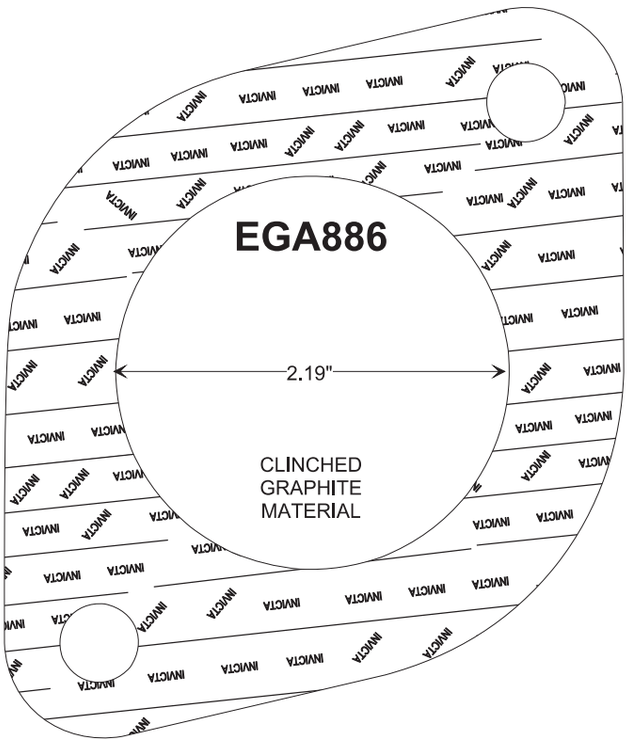

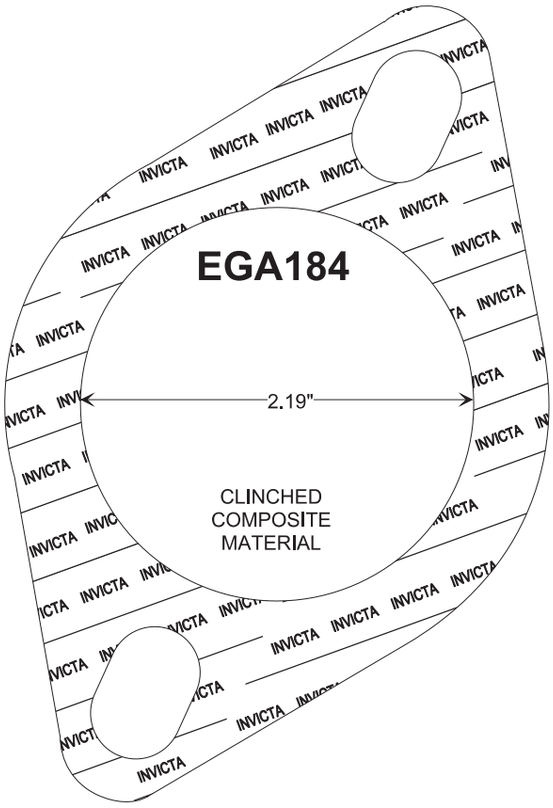

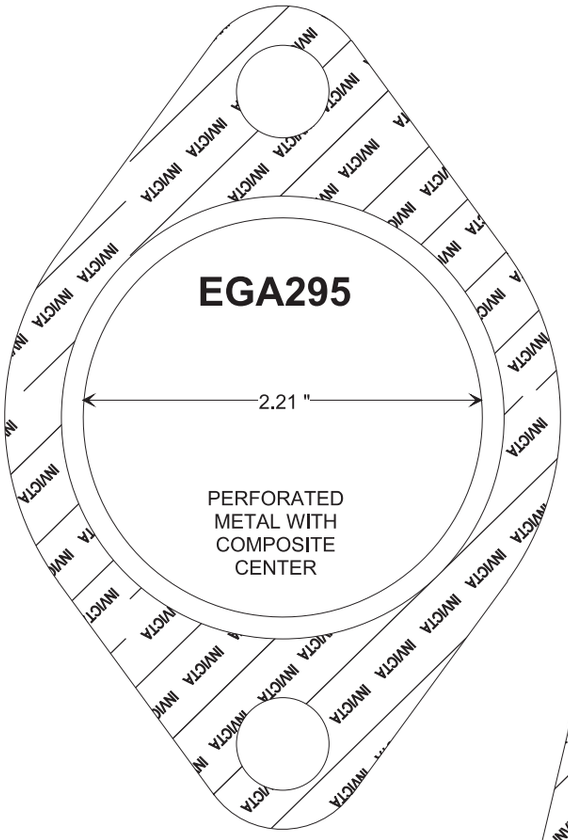

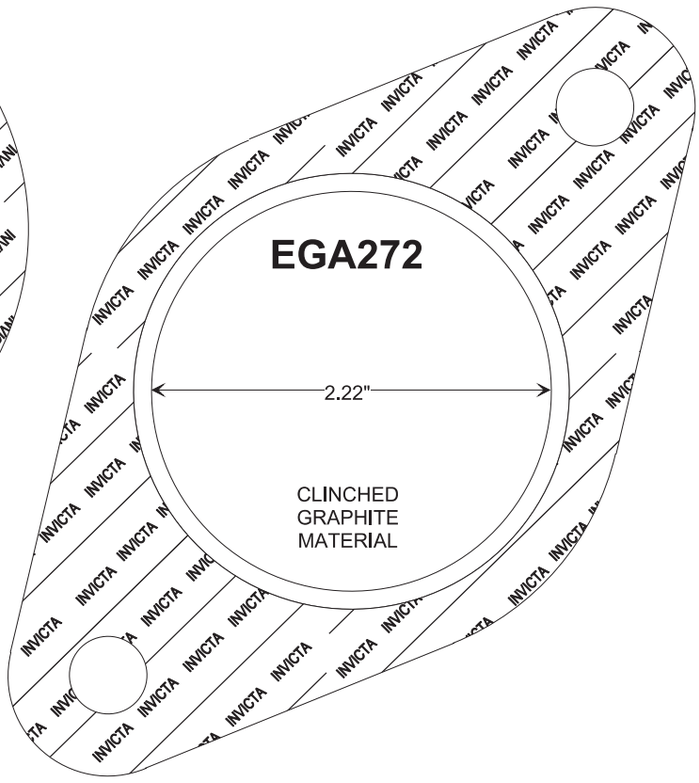

DESIGN STYLE 1

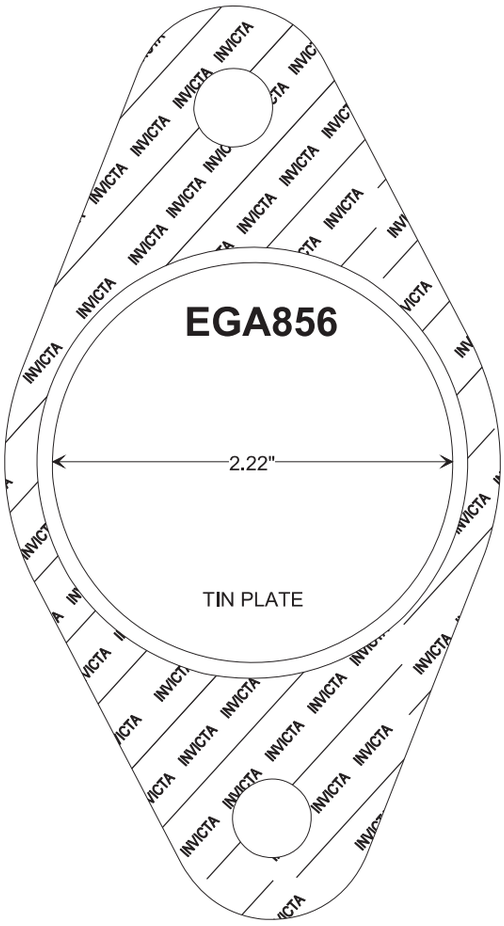

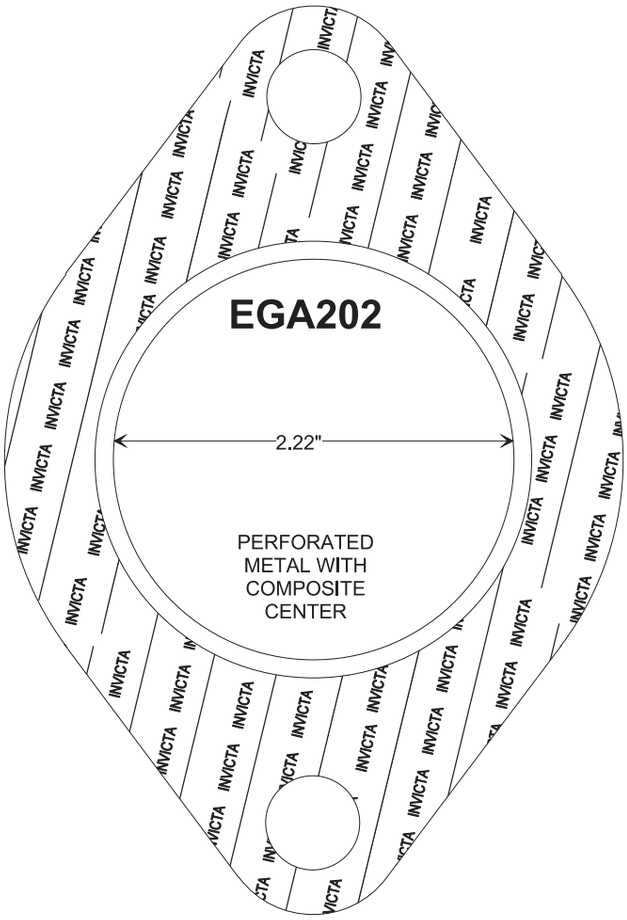

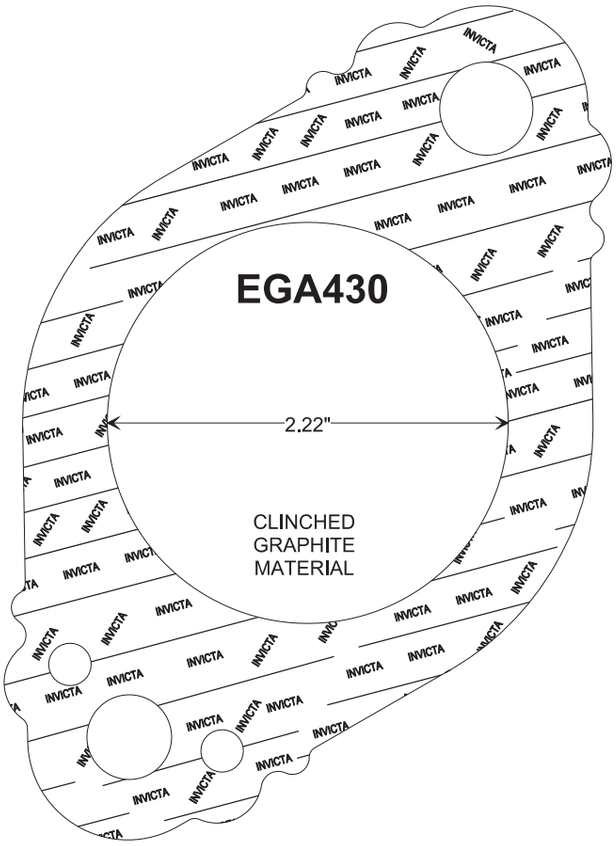

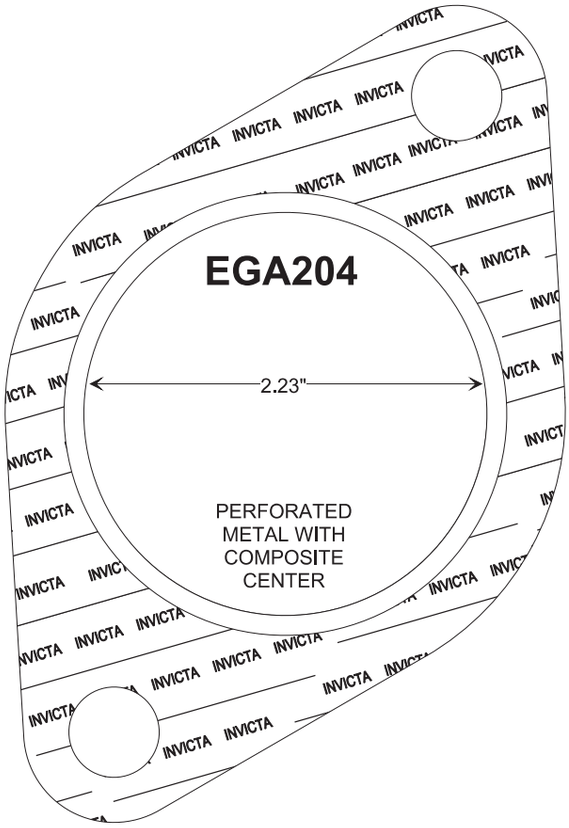

DESIGN STYLE 1

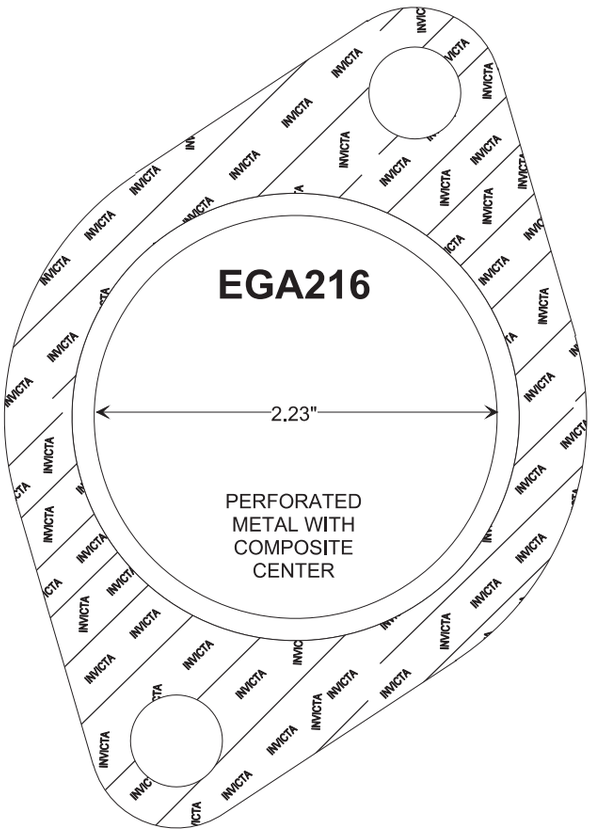

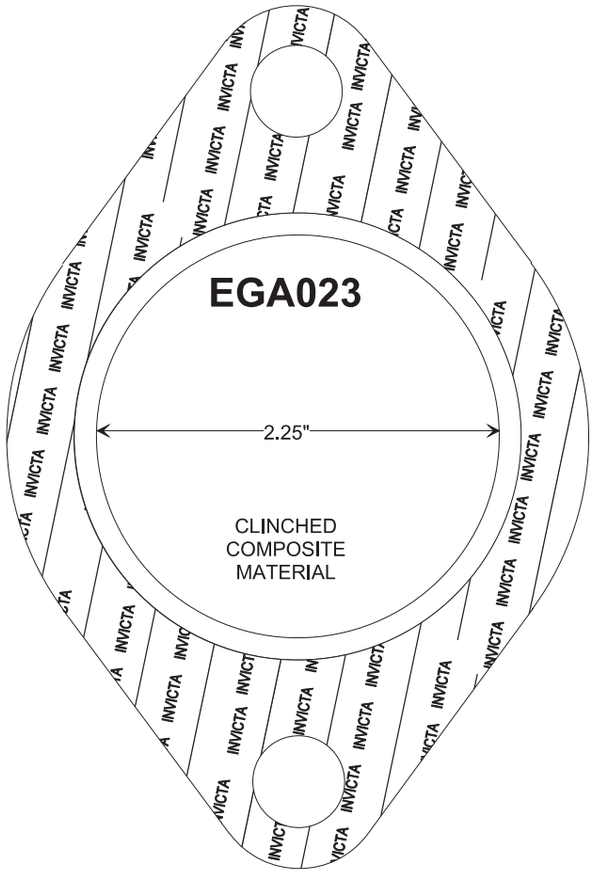

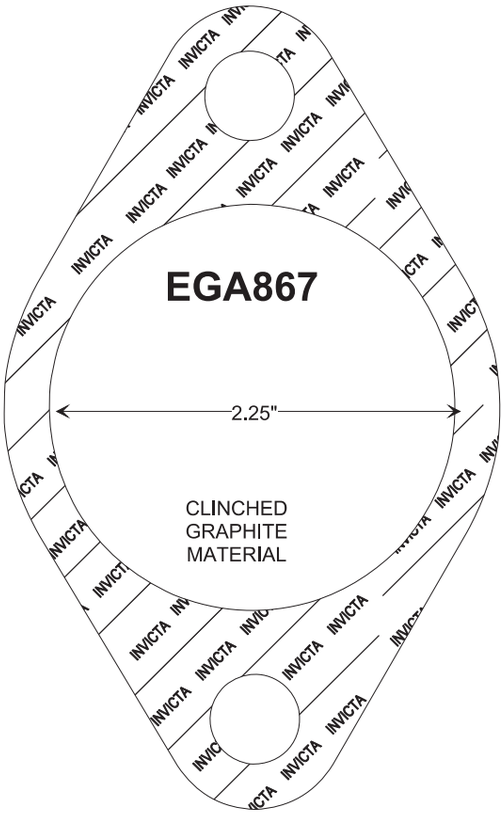

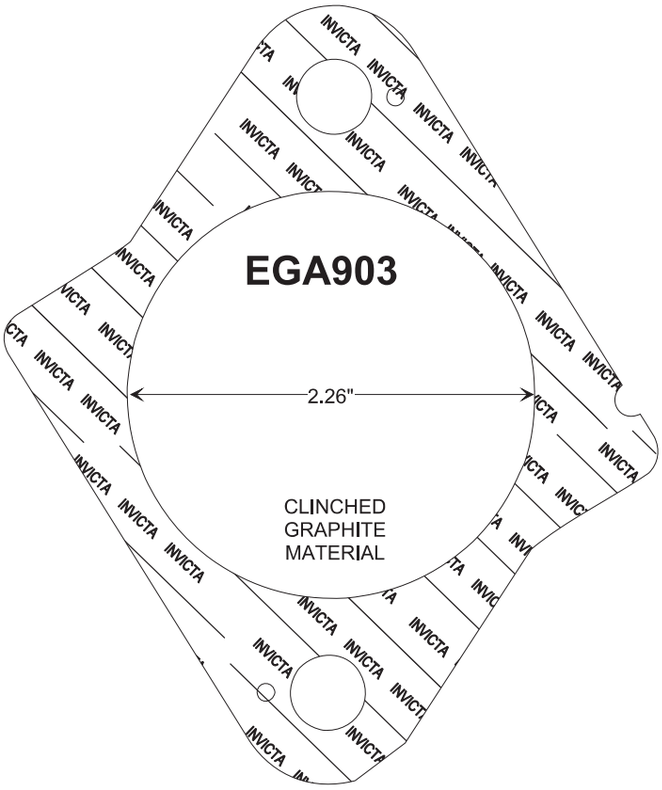

DESIGN STYLE 1

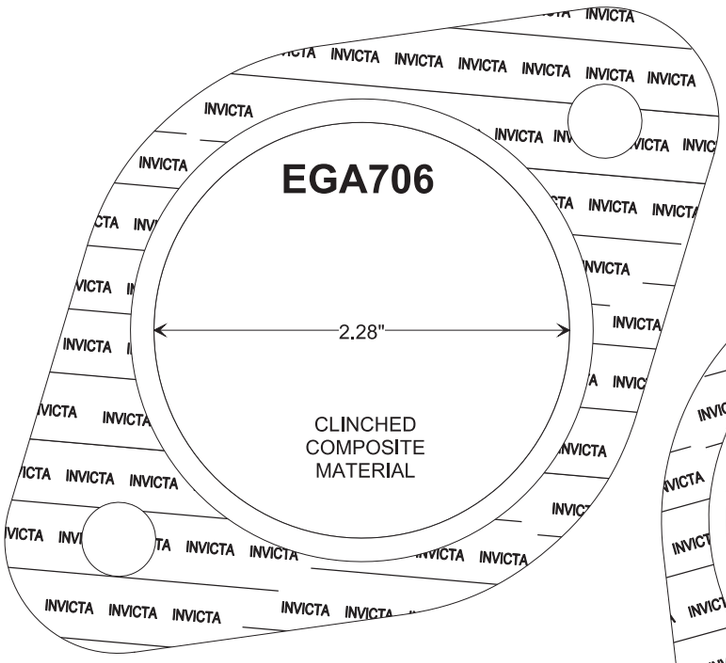

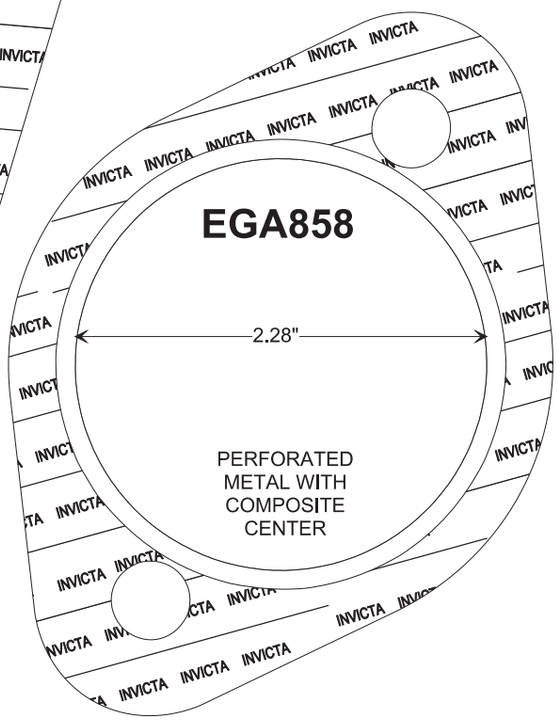

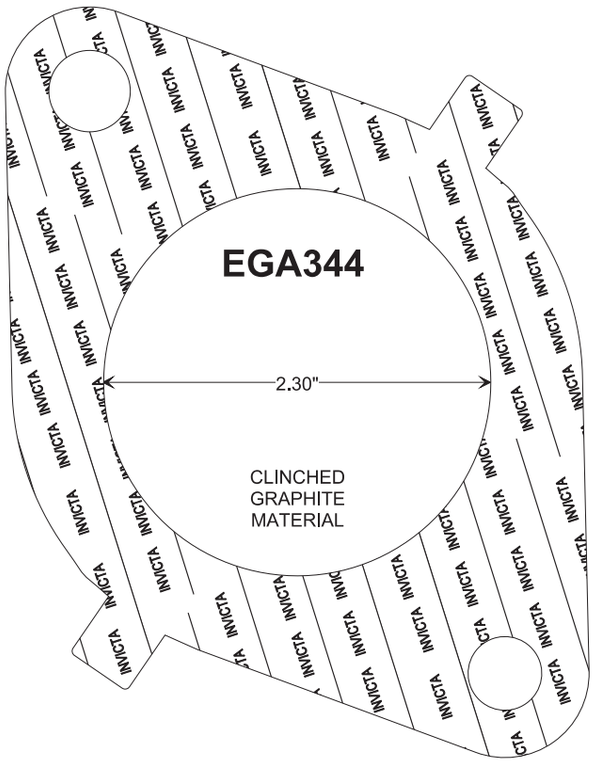

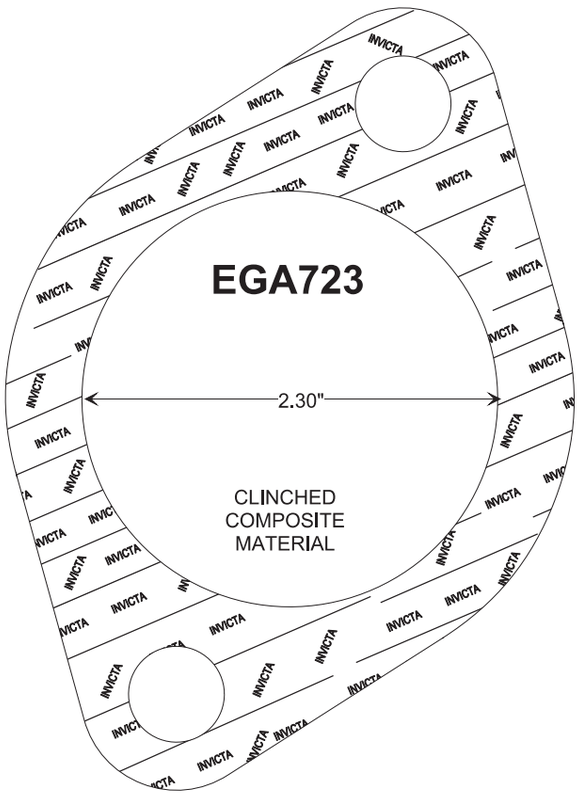

DESIGN STYLE 1

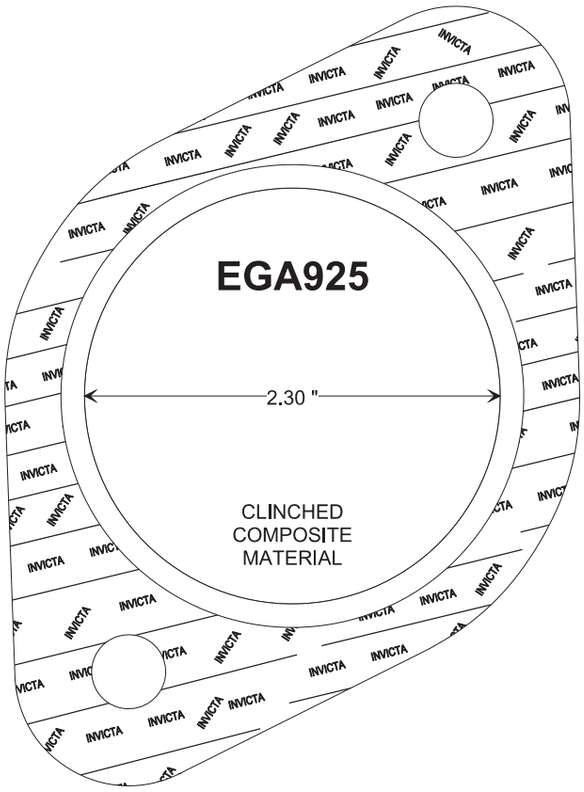

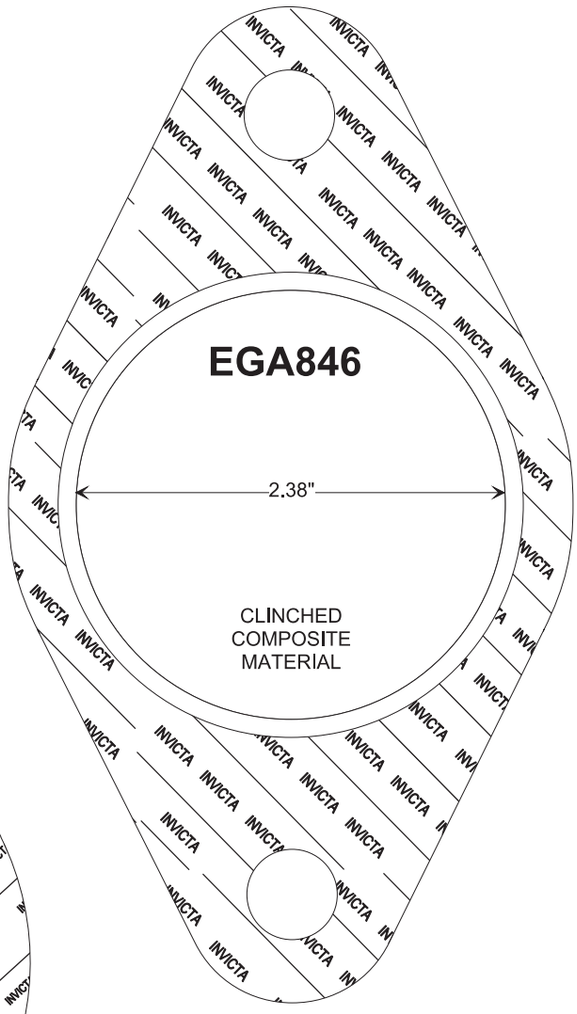

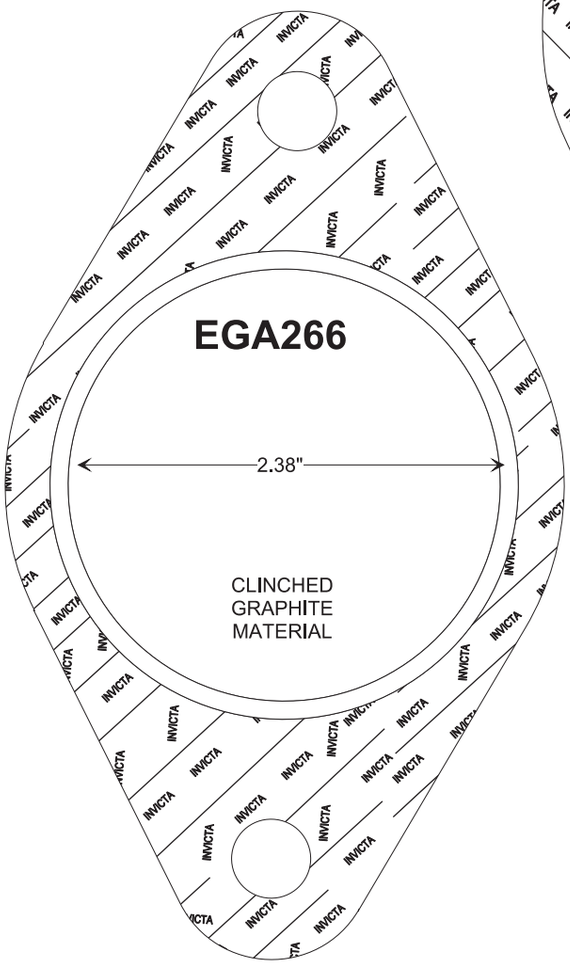

DESIGN STYLE 1

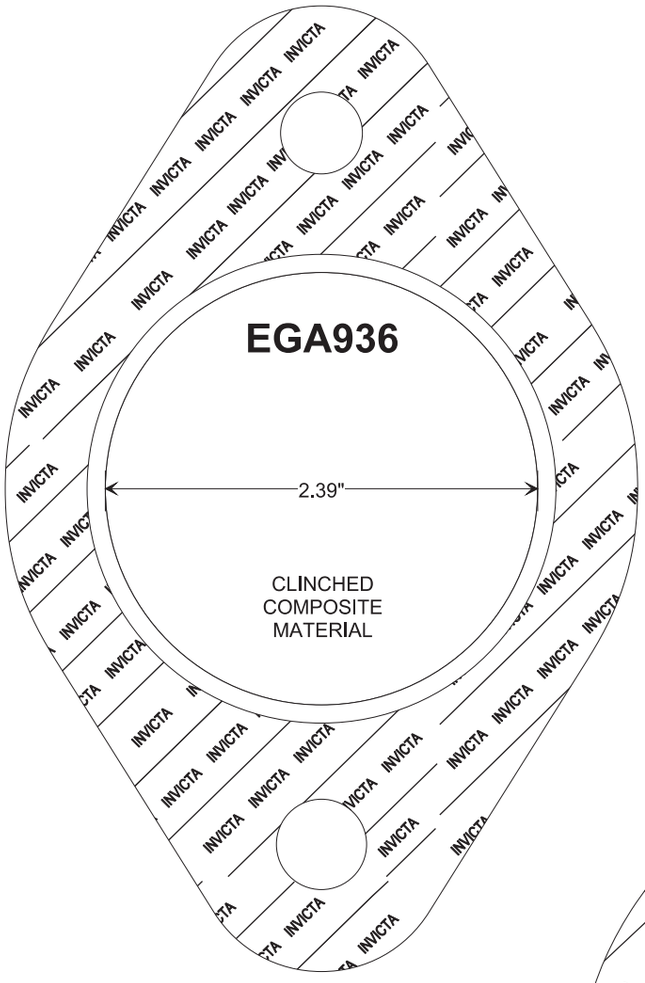

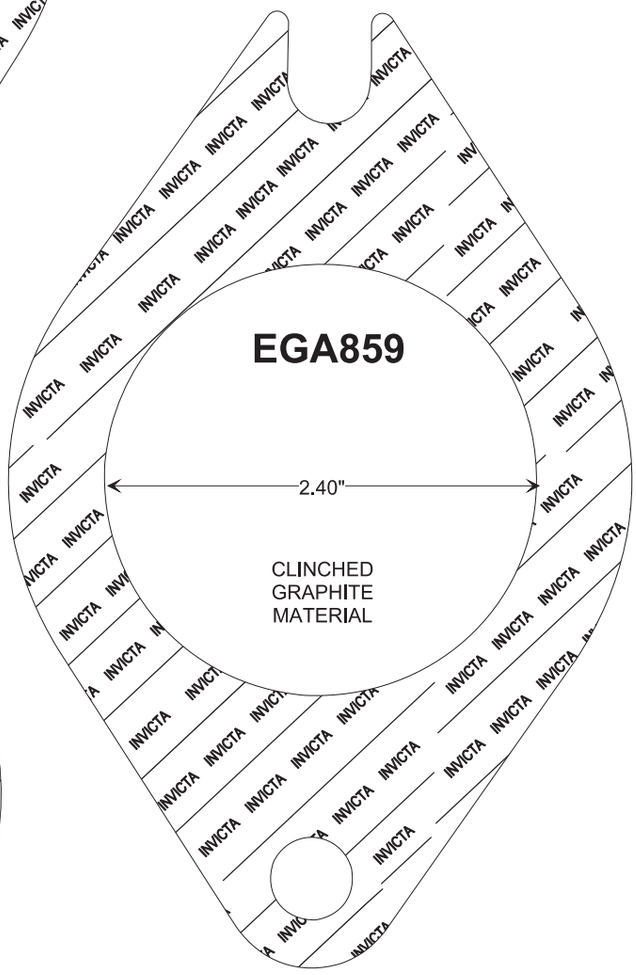

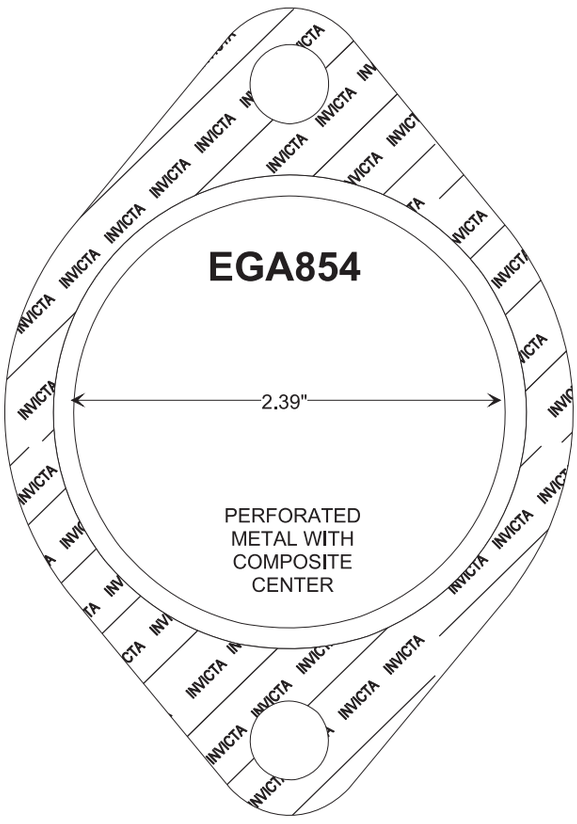

DESIGN STYLE 1

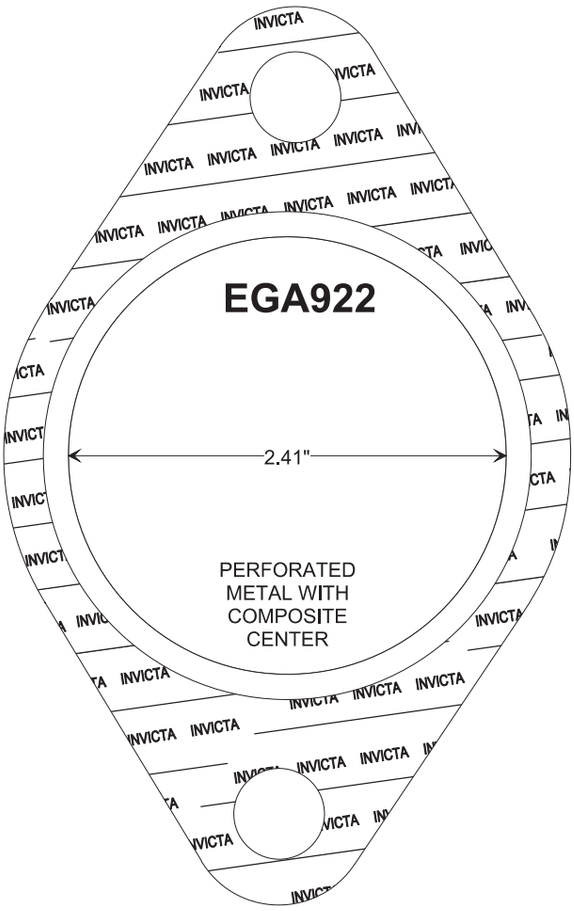

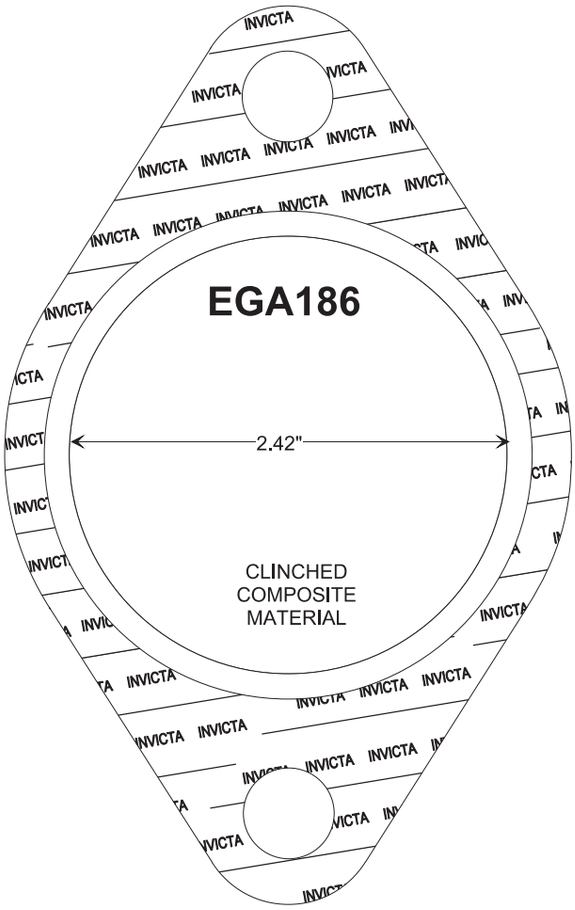

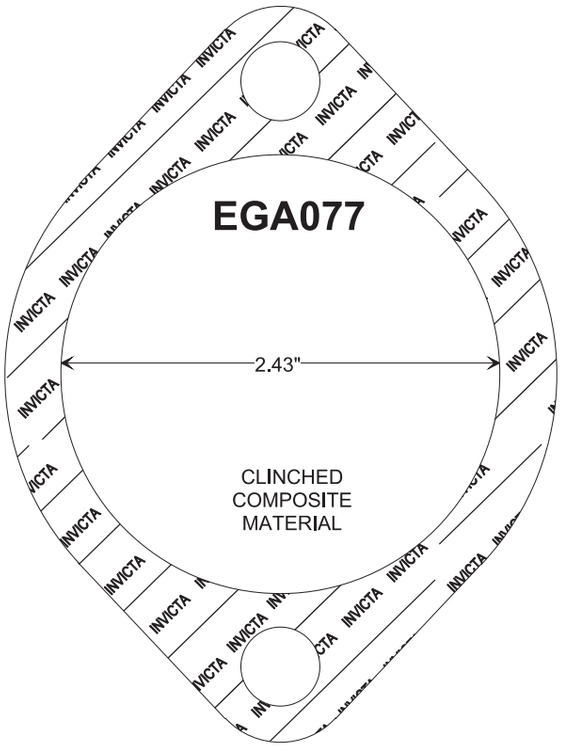

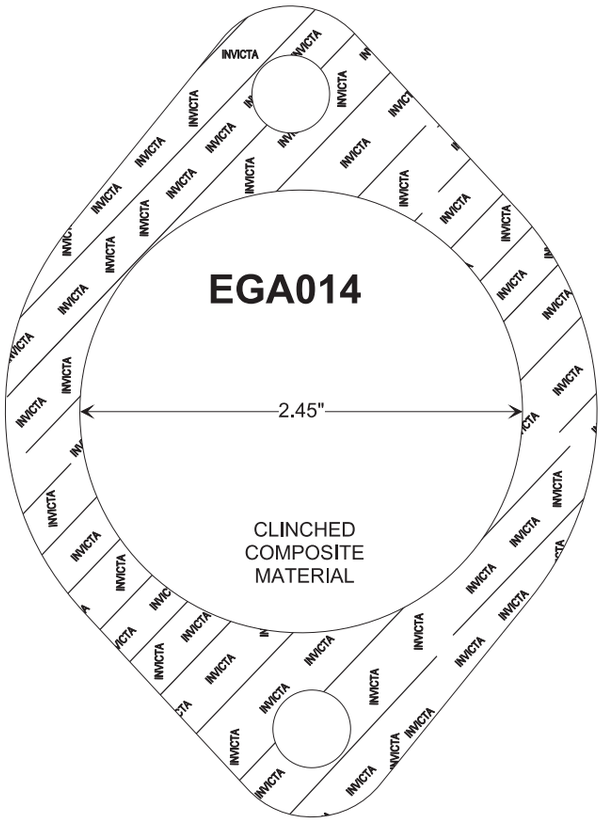

DESIGN STYLE 1

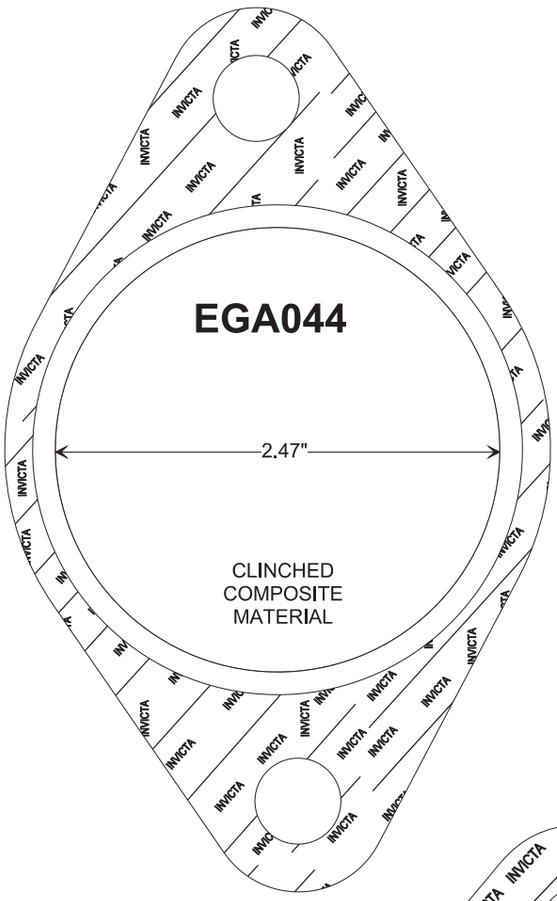

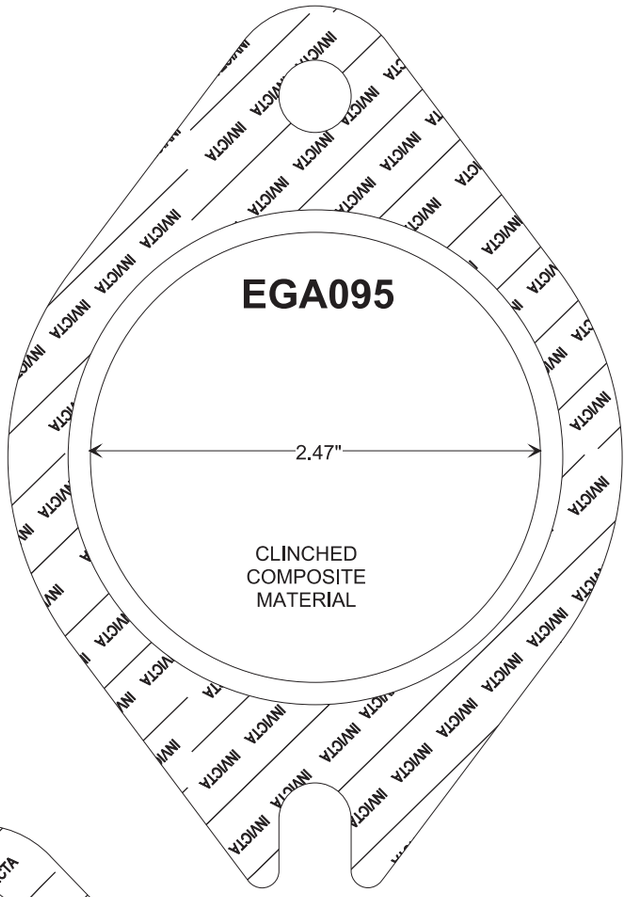

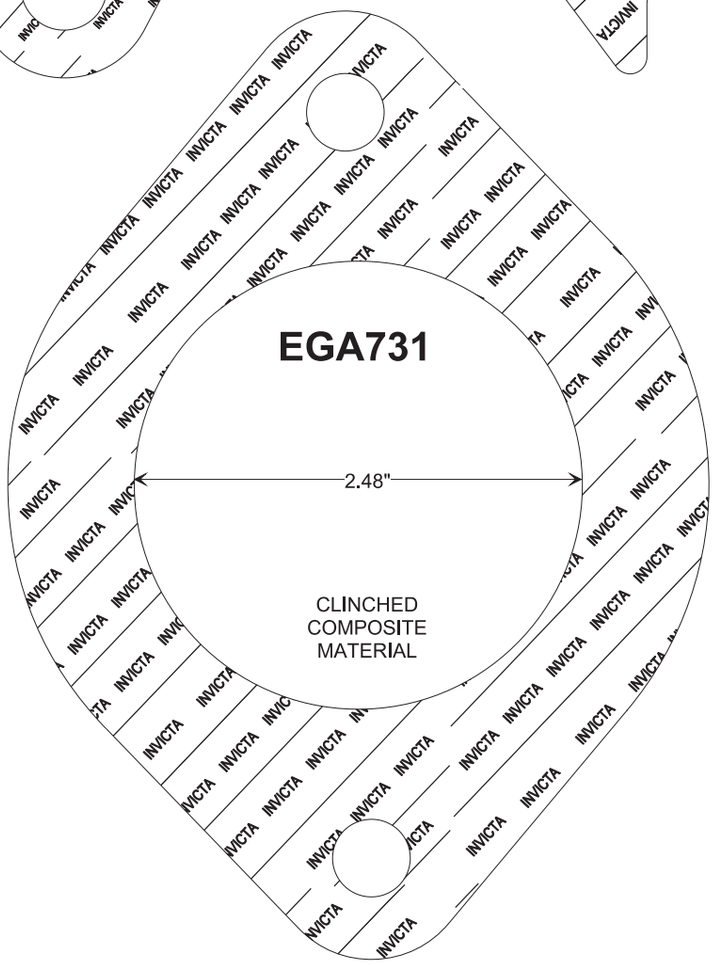

DESIGN STYLE 1

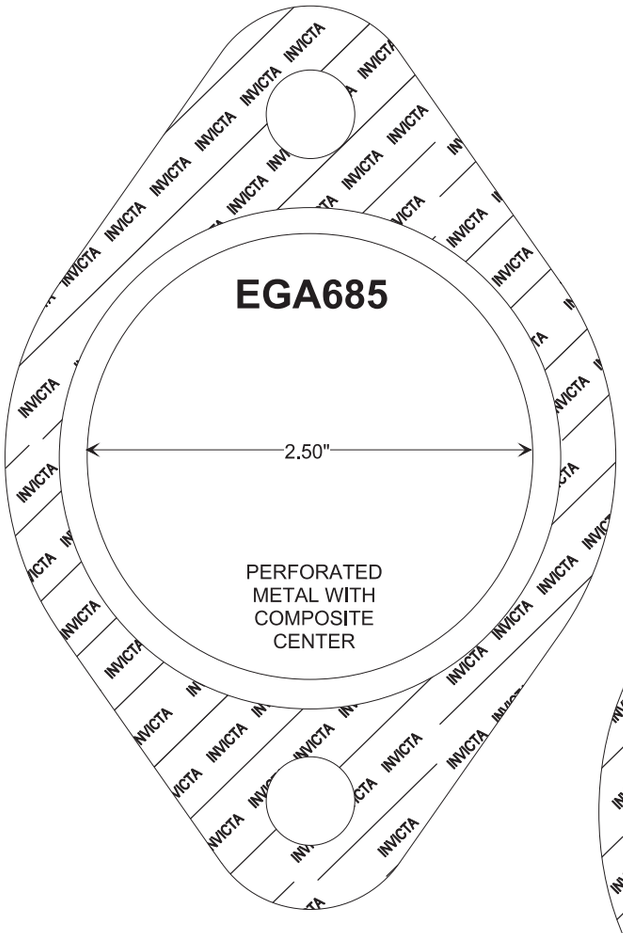

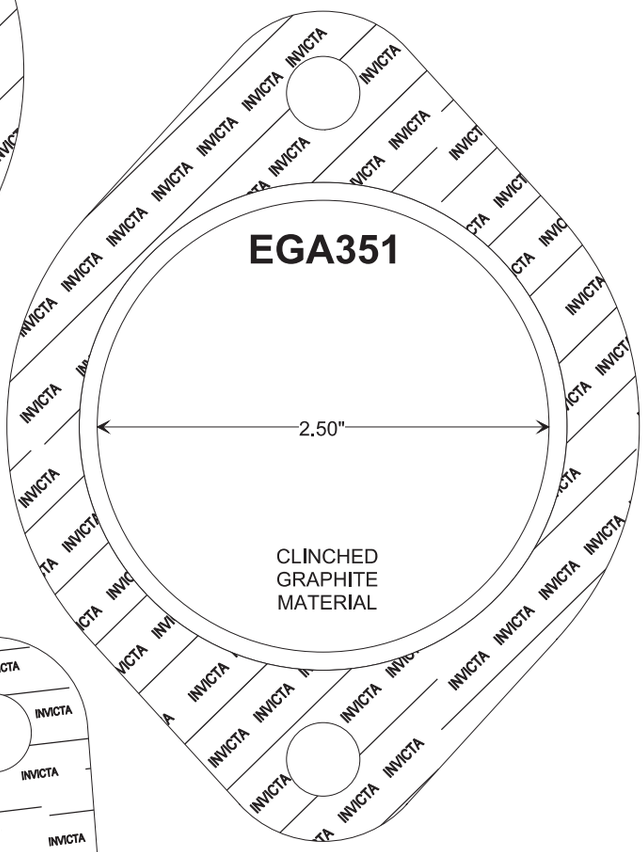

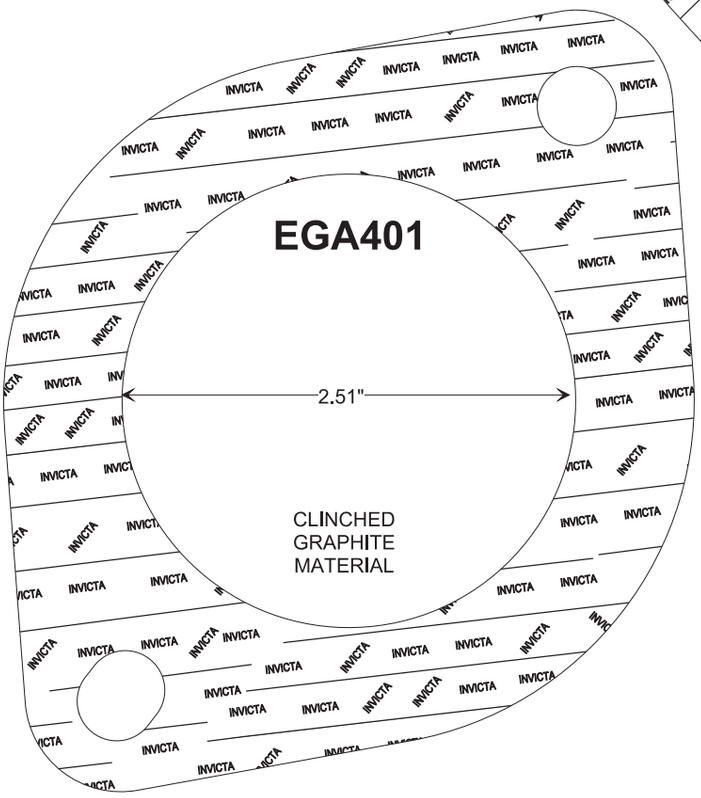

DESIGN STYLE 1

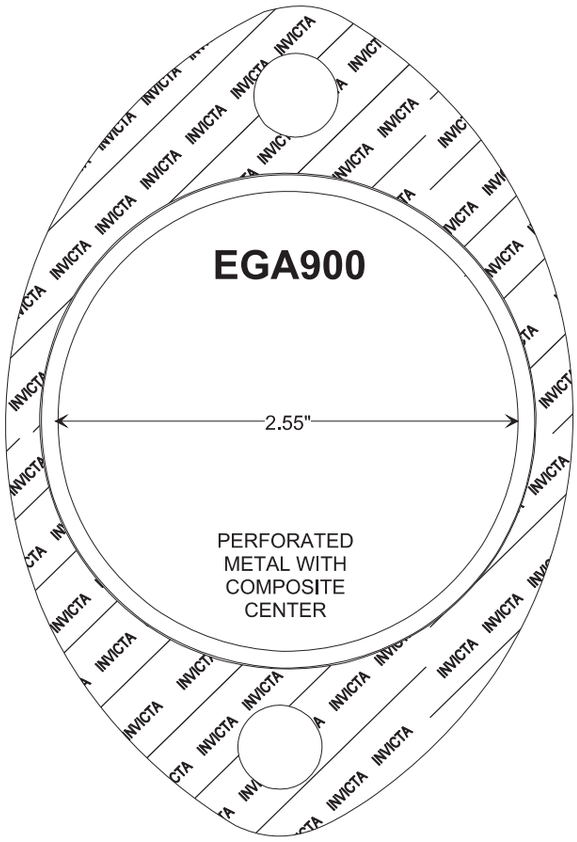

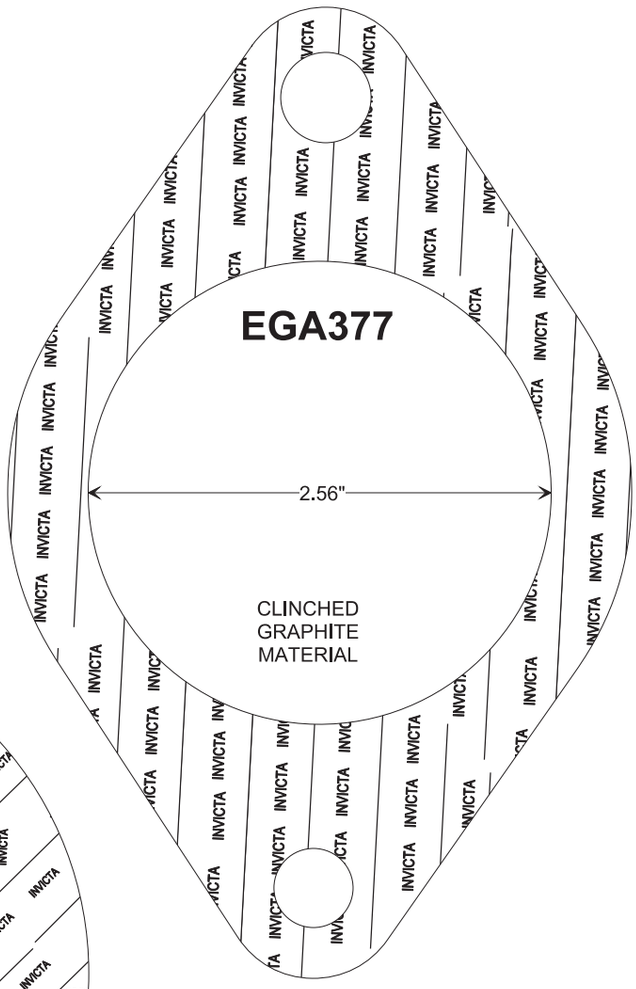

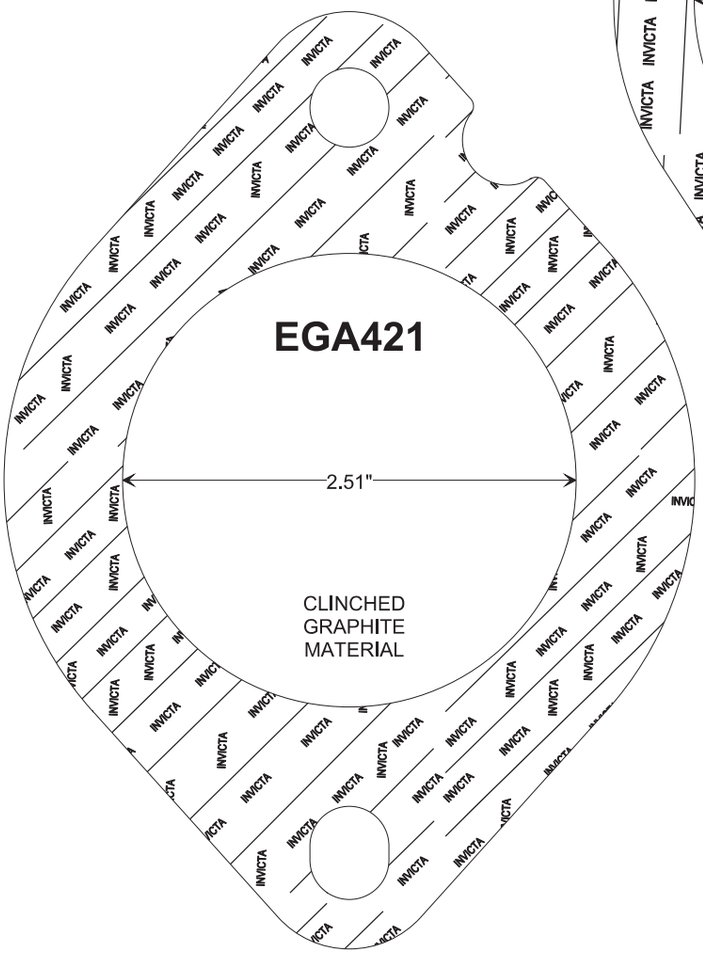

DESIGN STYLE 1

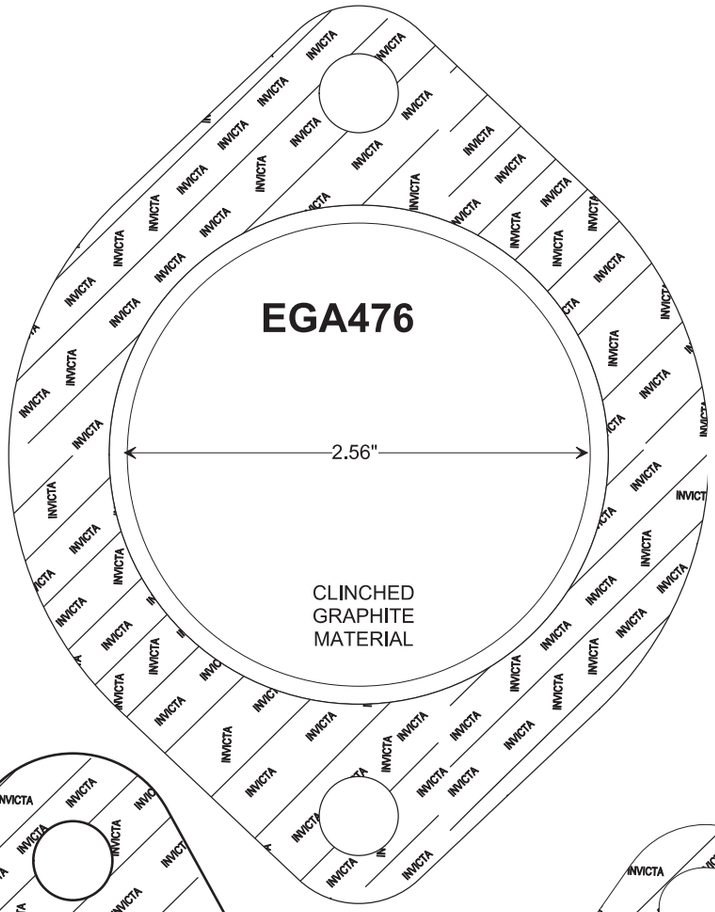

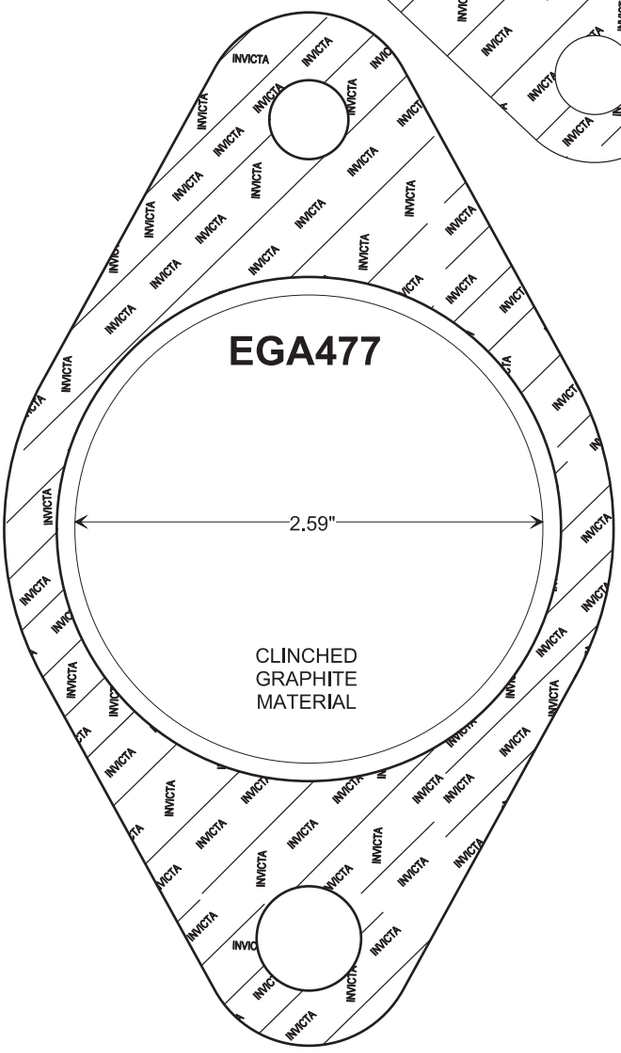

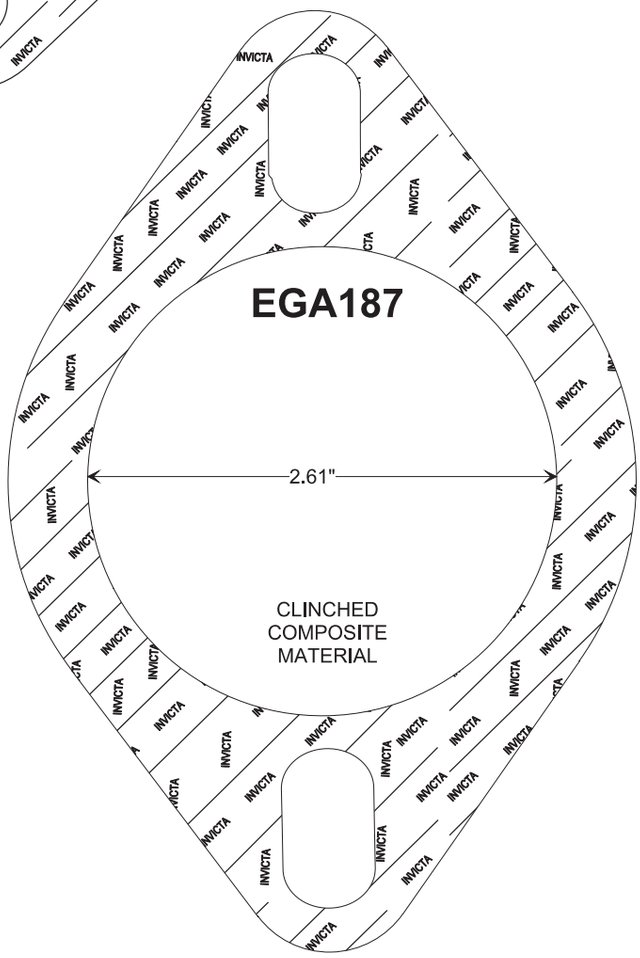

DESIGN STYLE 1

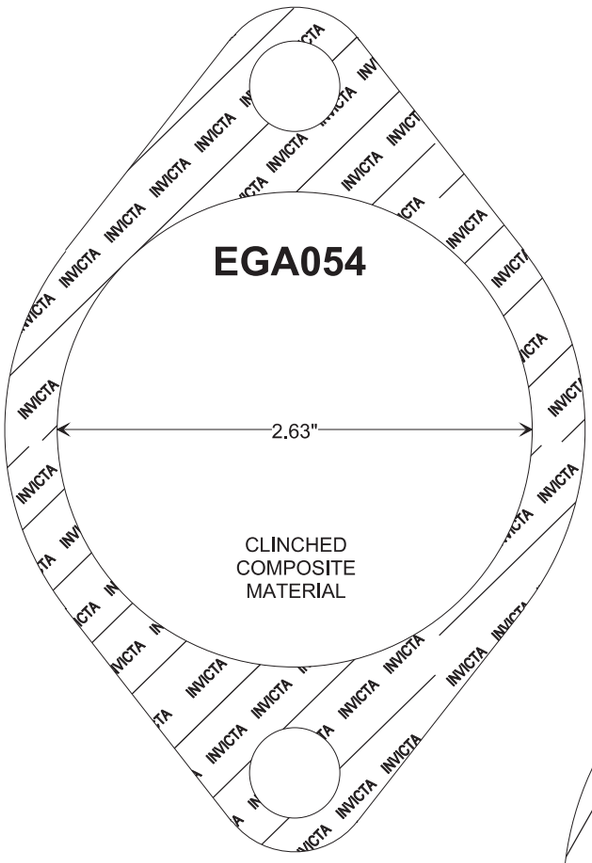

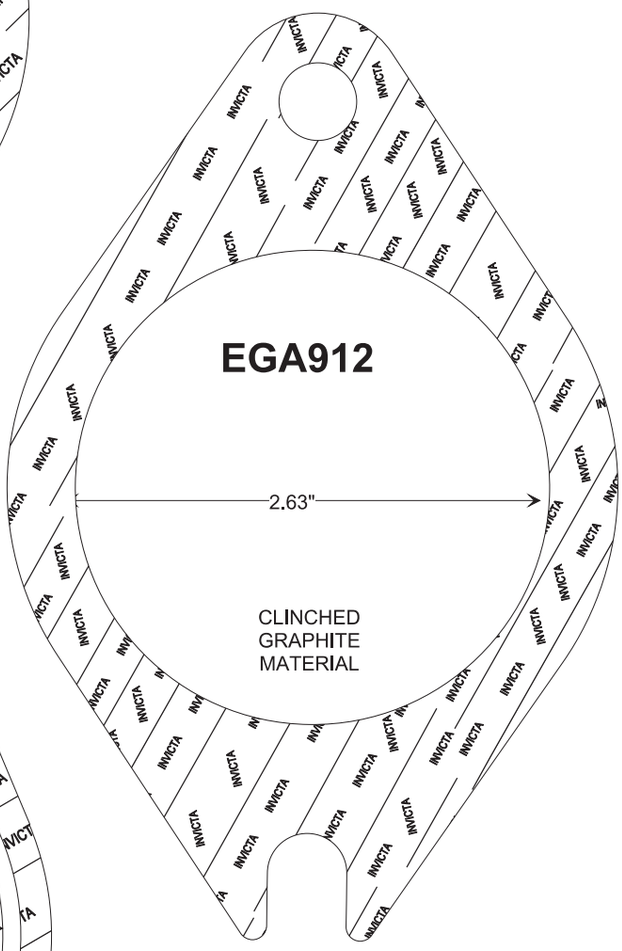

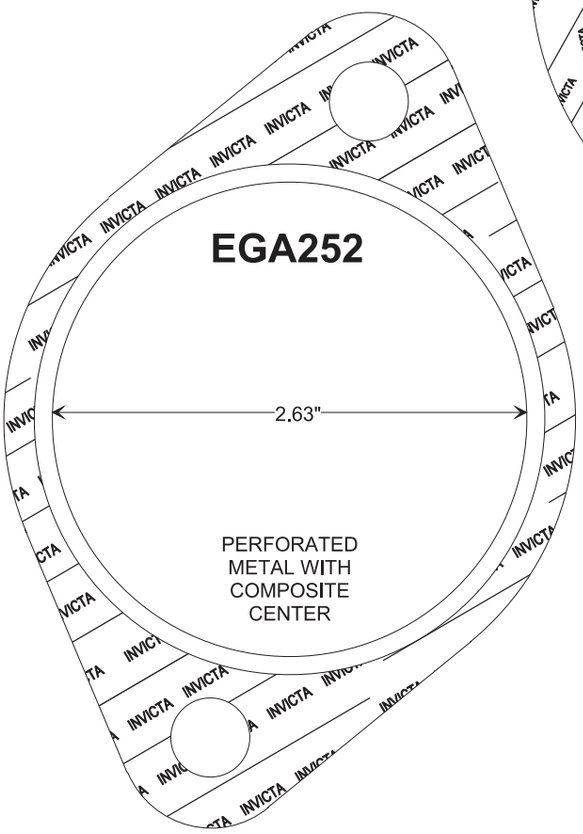

DESIGN STYLE 1

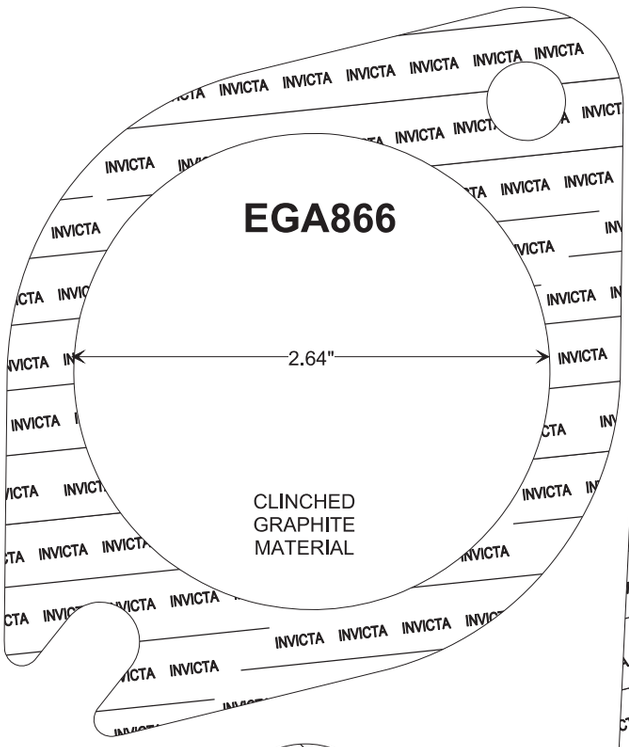

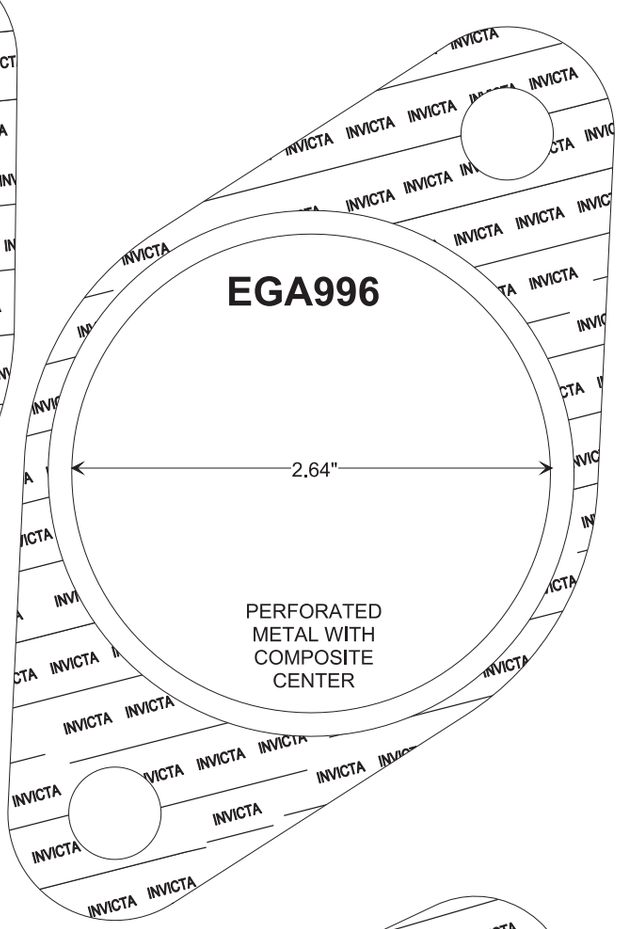

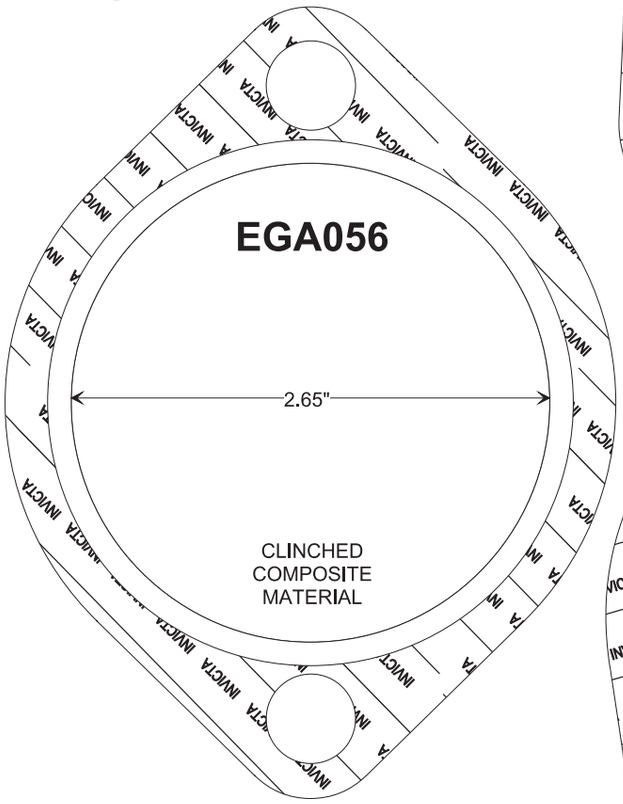

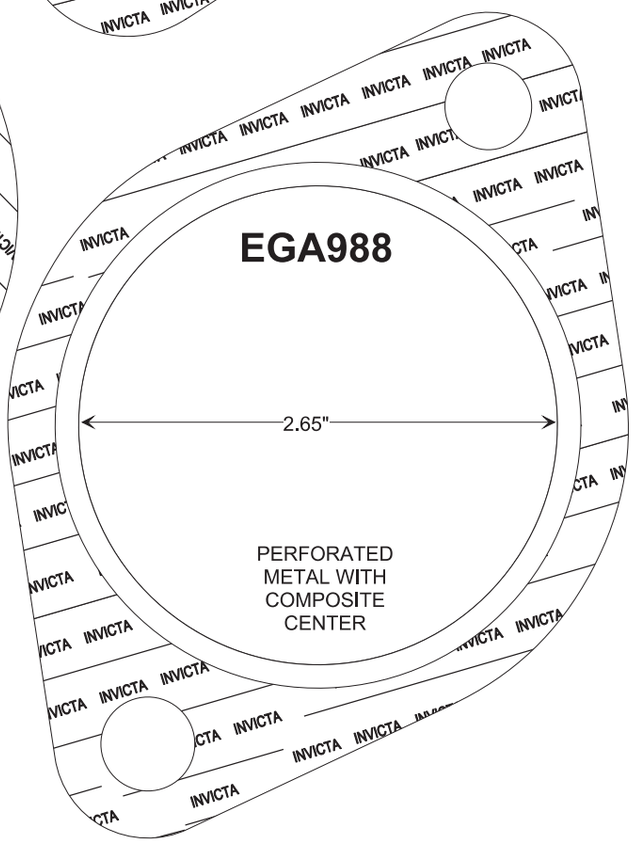

DESIGN STYLE 1

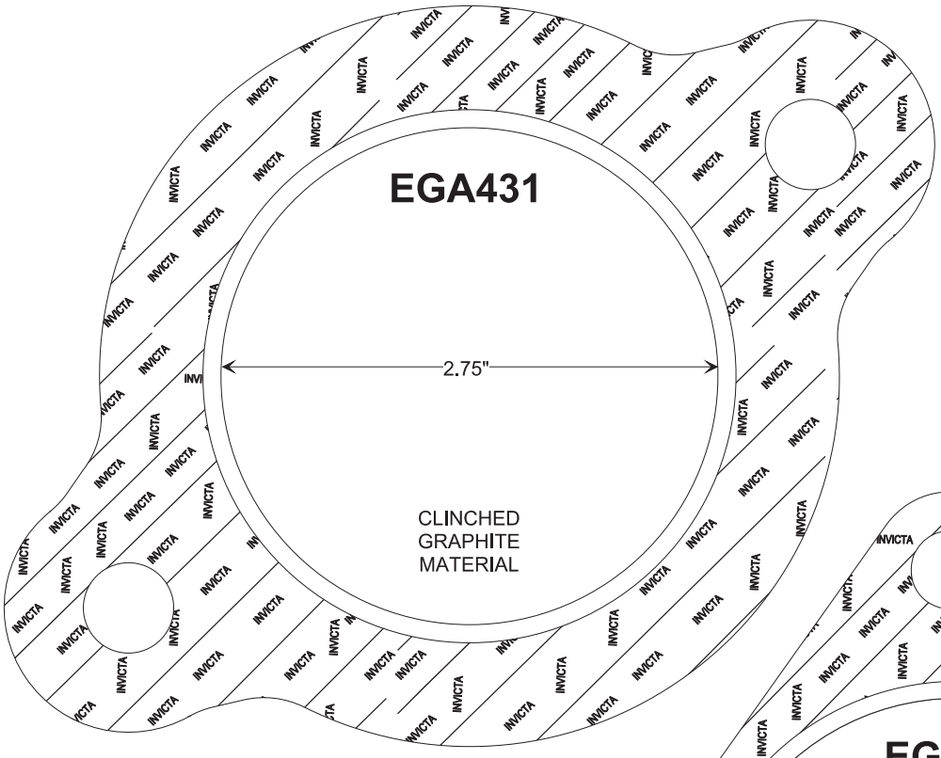

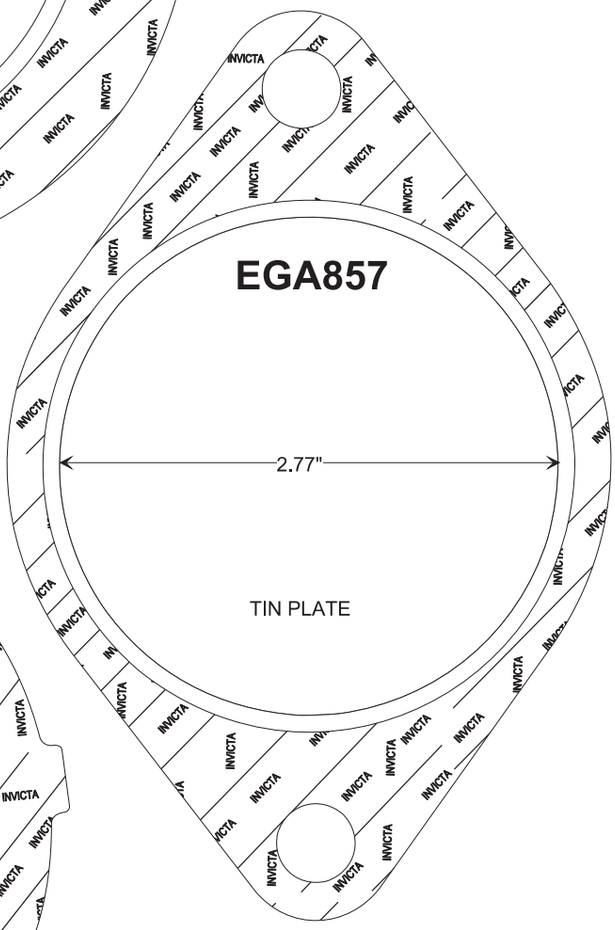

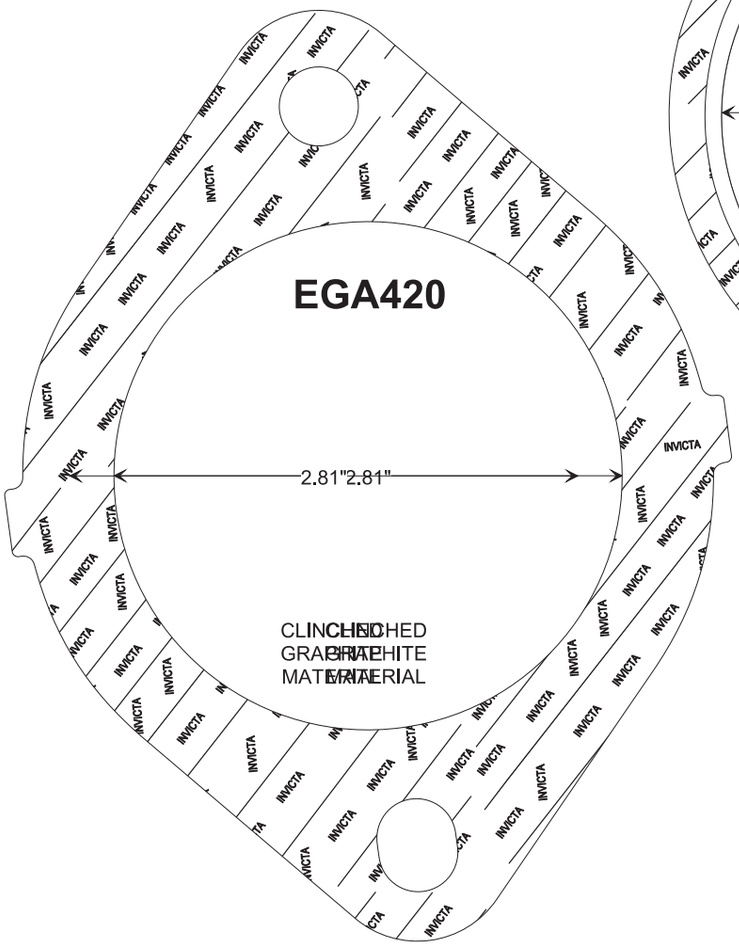

DESIGN STYLE 1

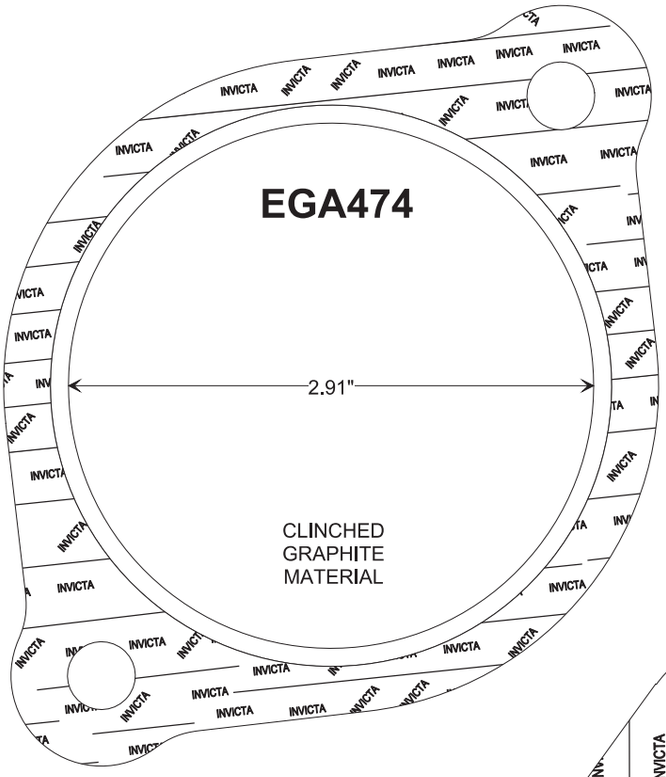

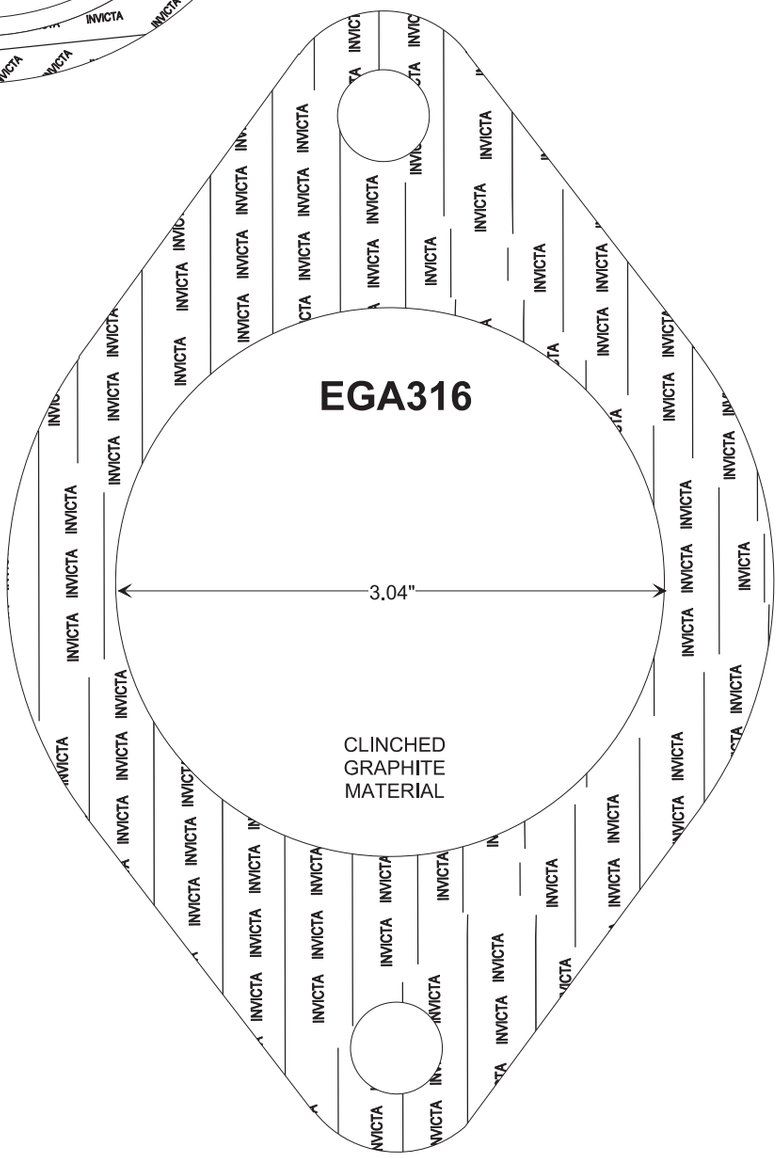

DESIGN STYLE 1

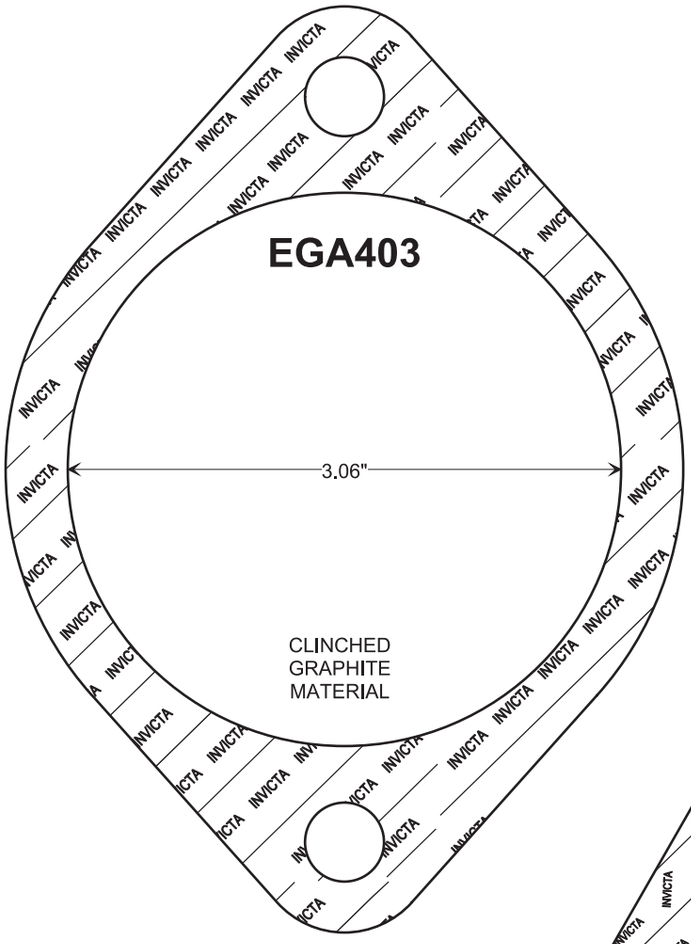

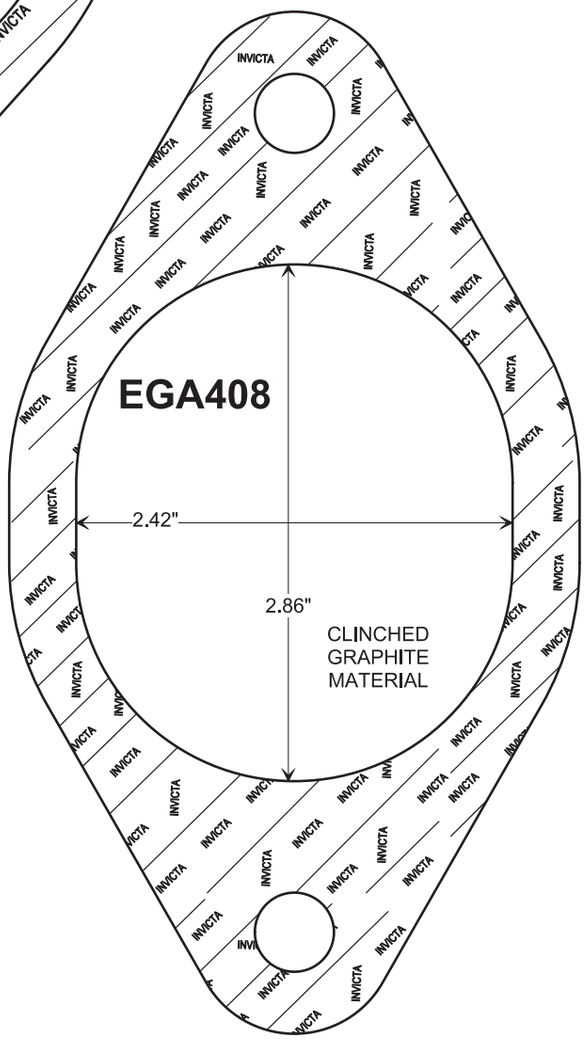

DESIGN STYLE 2

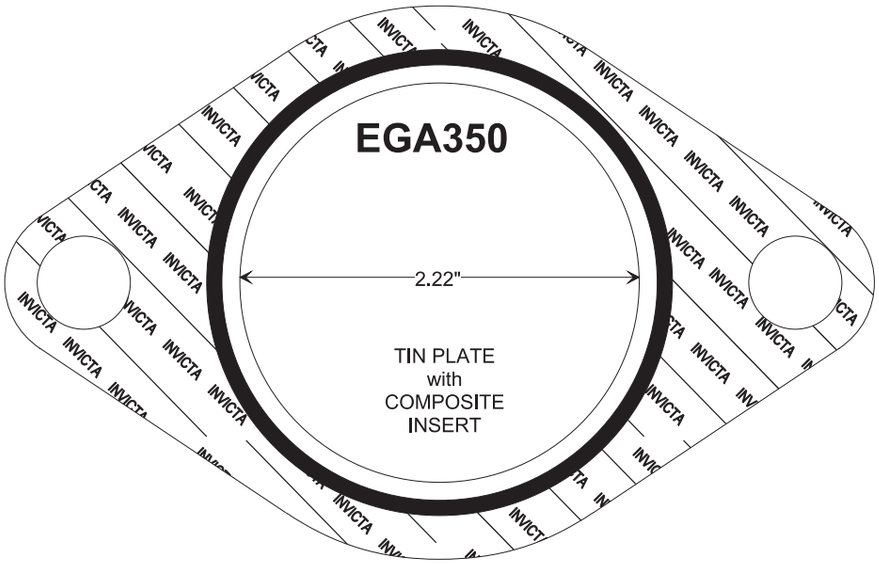

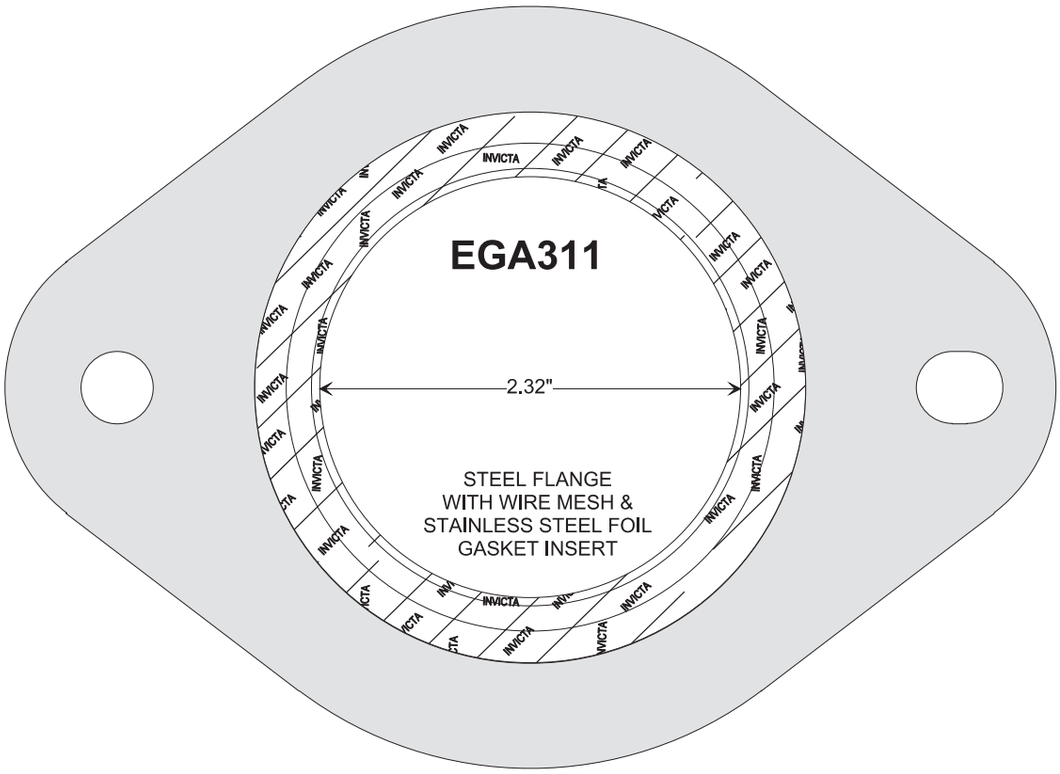

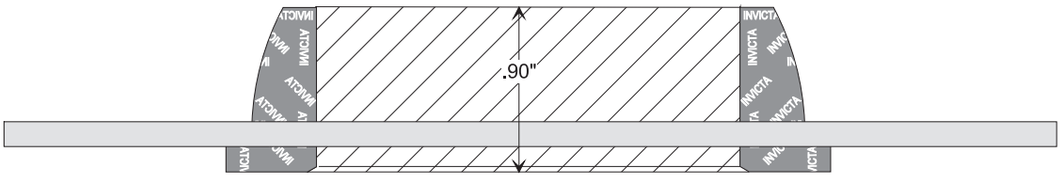

DESIGN STYLE 2

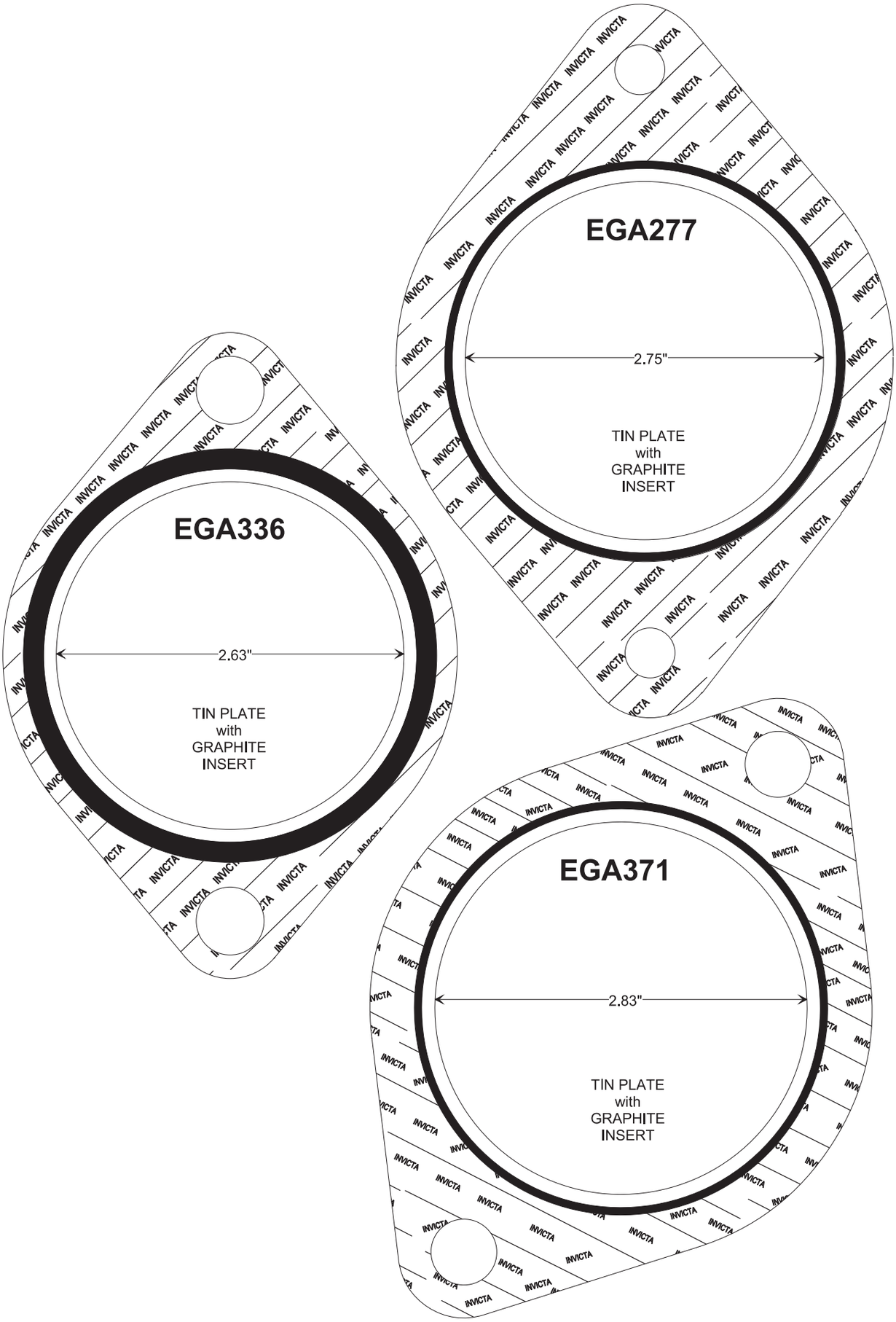

DESIGN STYLE 2

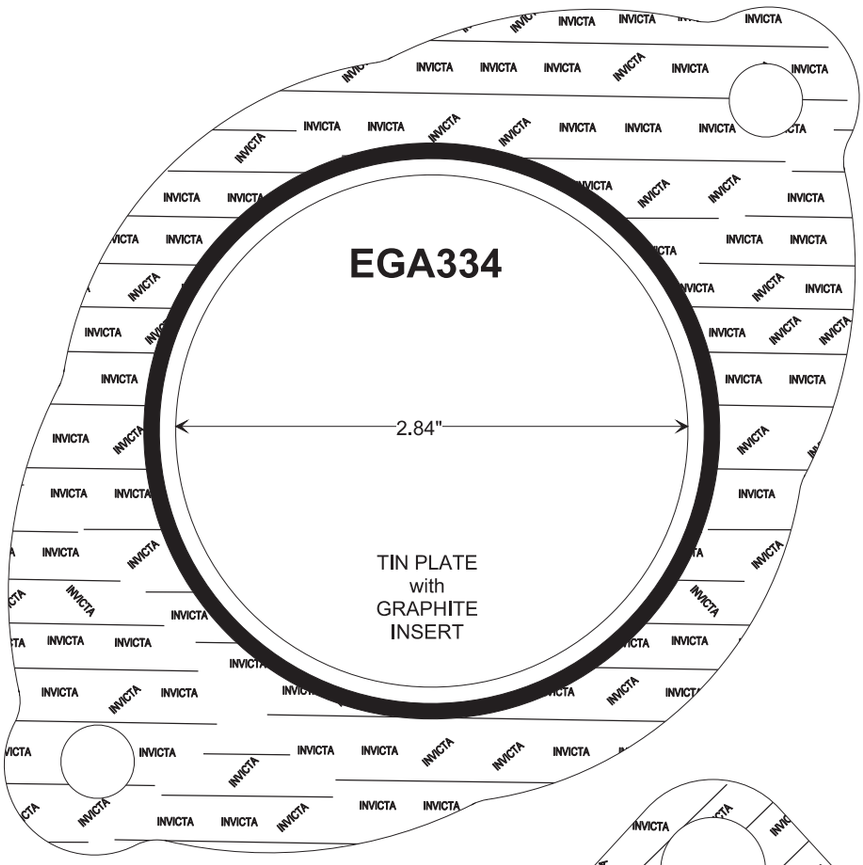

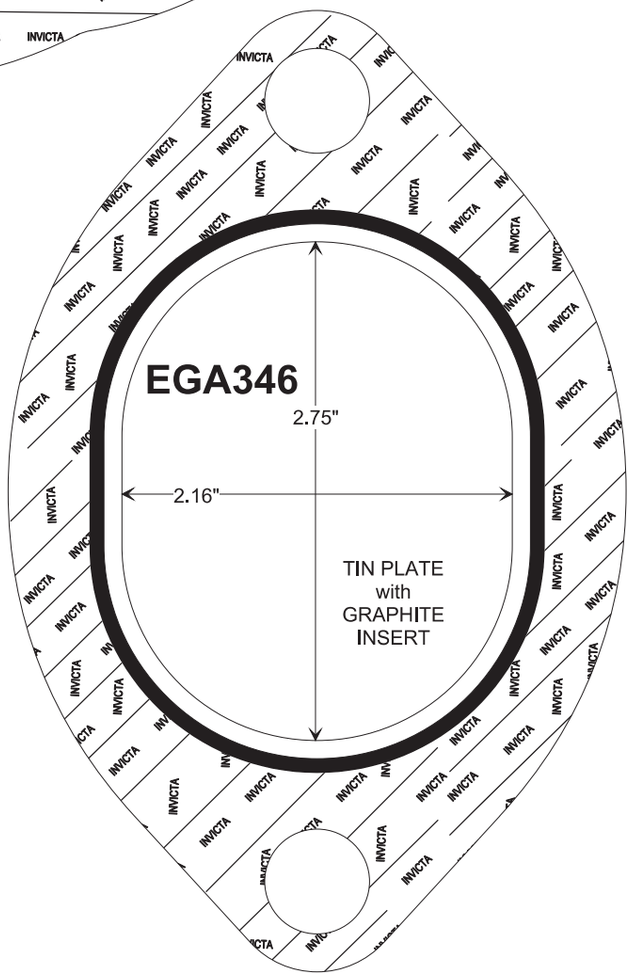

DESIGN STYLE 3

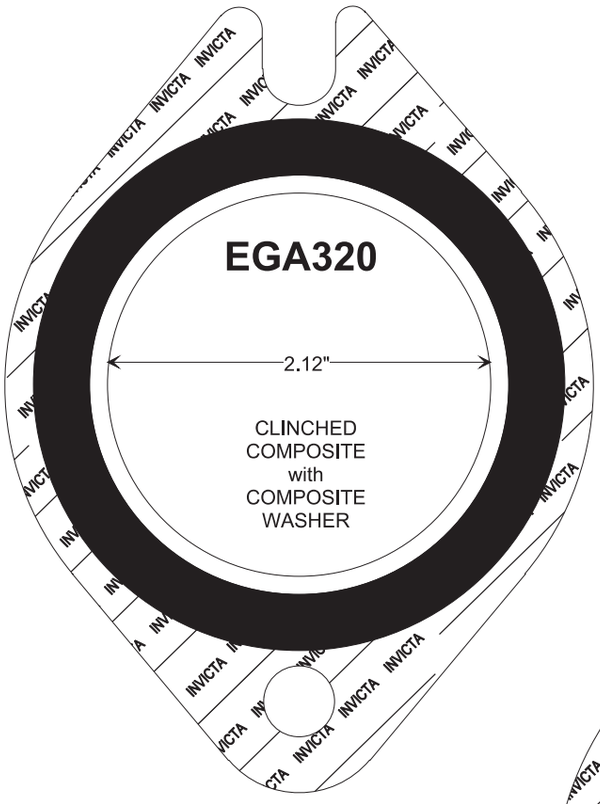

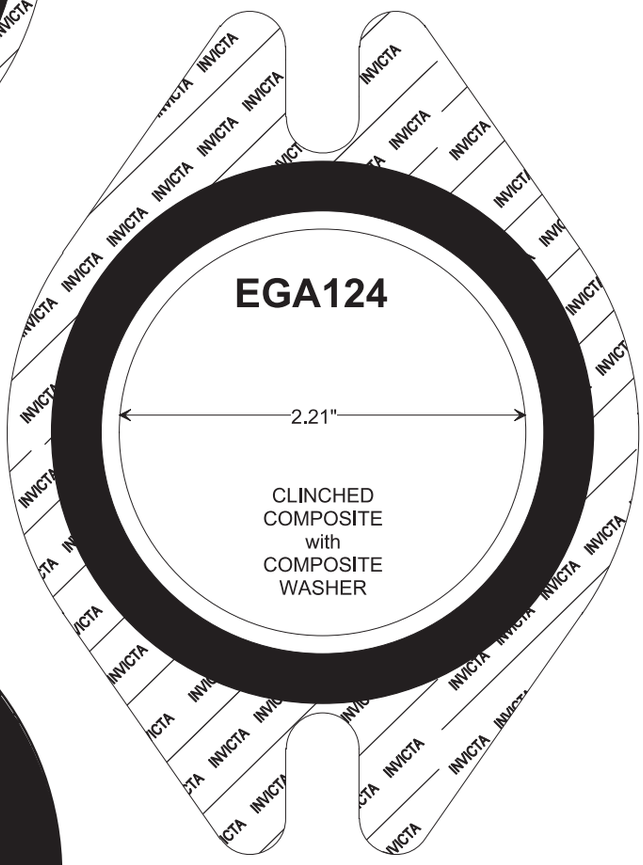

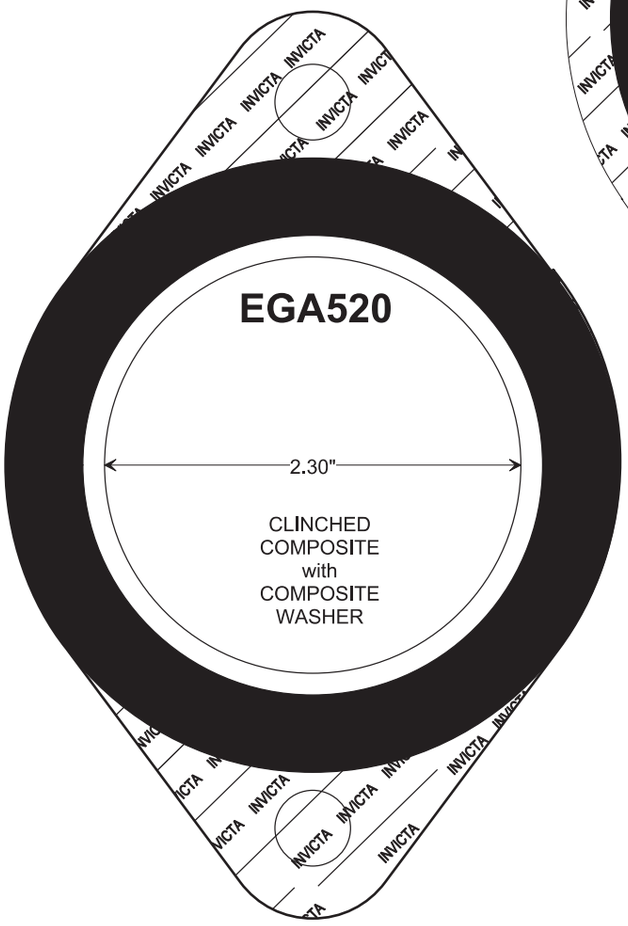

DESIGN STYLE 3

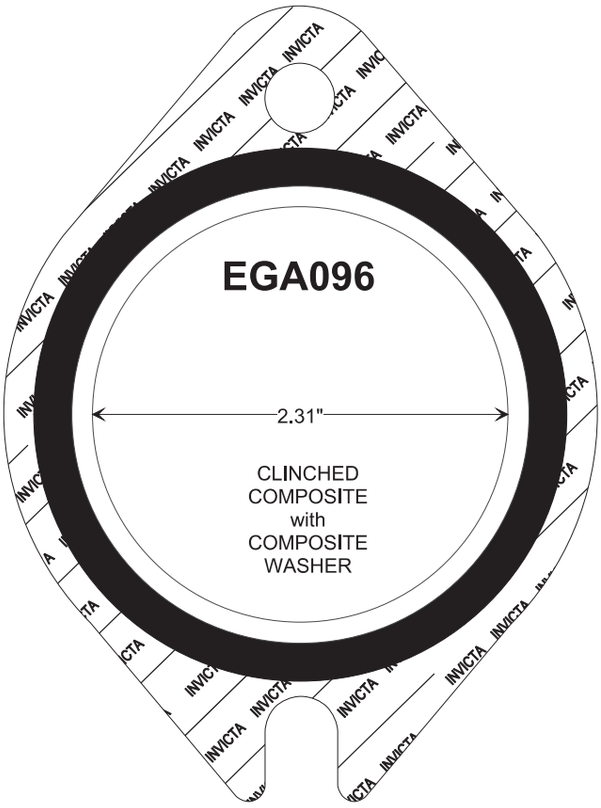

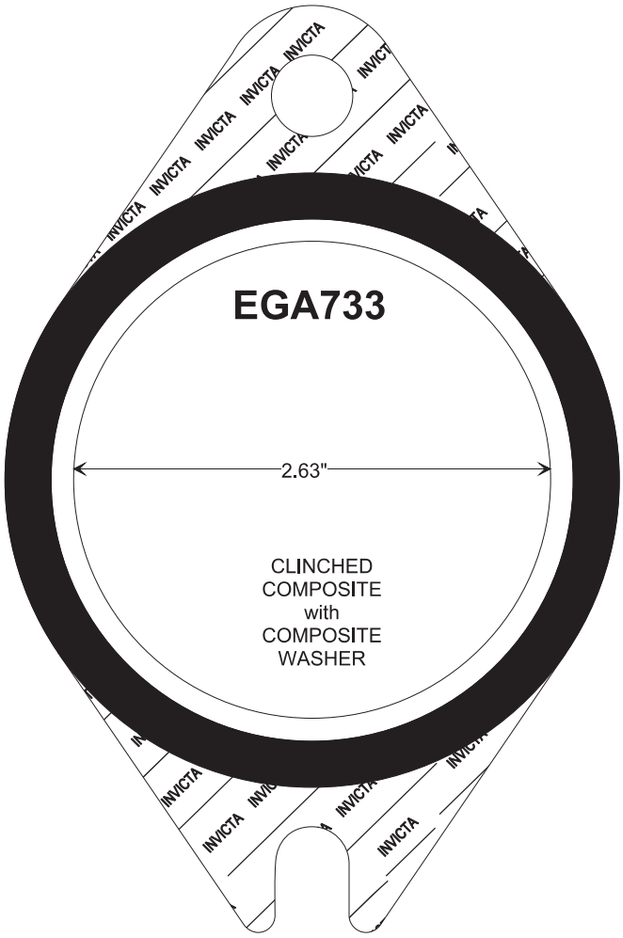

DESIGN STYLE 4

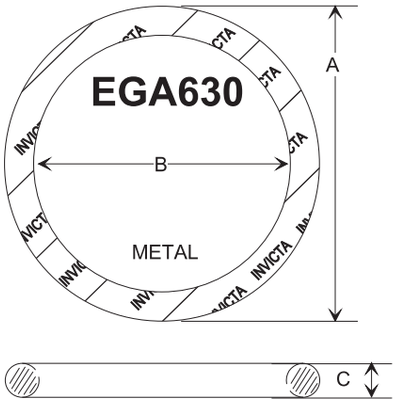

A-1-3/4" B-1-13/32" C- 5/32"

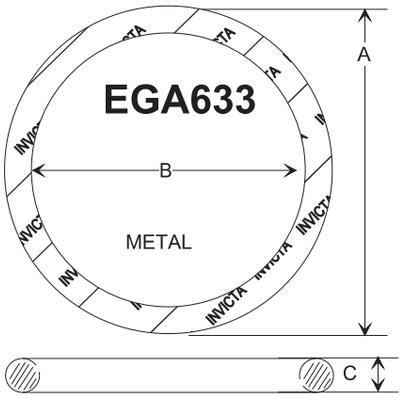

A-1-17/32" B- **1-13/16"** C- 7/32"

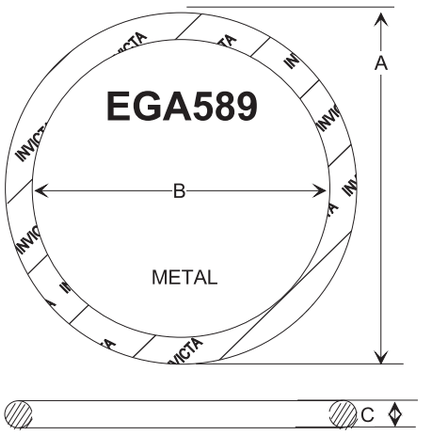

A-1-15/16" B-1-21/32" C- 5/32"

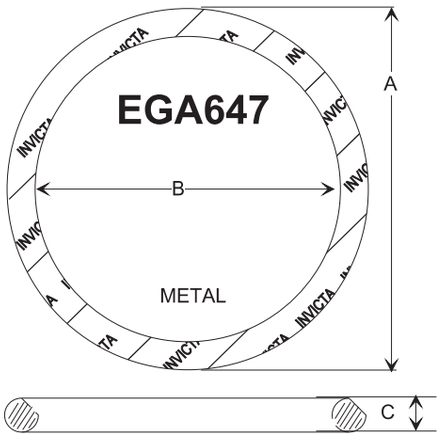

A-2" B-1-11/16" C- 3/16"

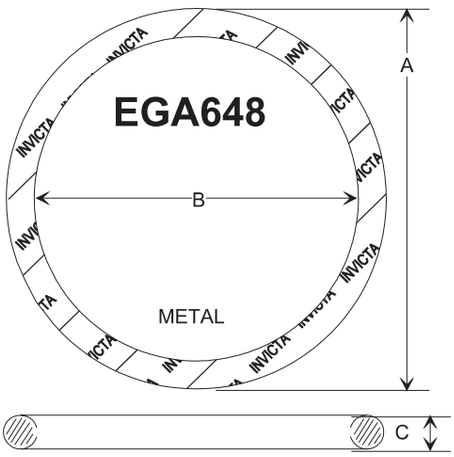

A-2-3/32" B-1-13/16" C- 3/16"

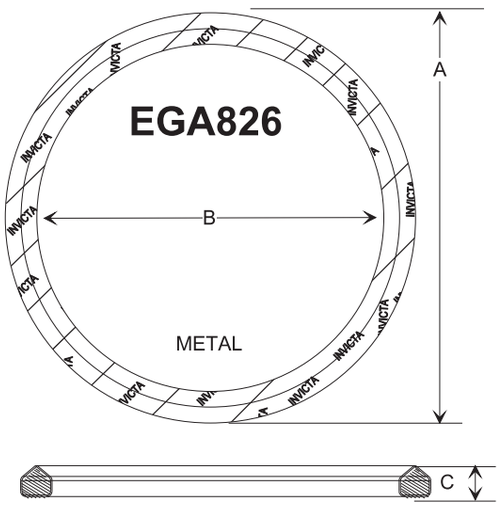

A-2-9/32" B-1-29/32" C- 3/16"

DESIGN STYLE 4

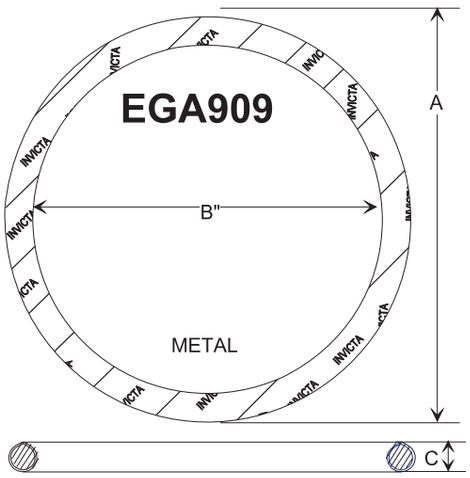

A-2-1/4" B-1-15/16" C- 5/32"

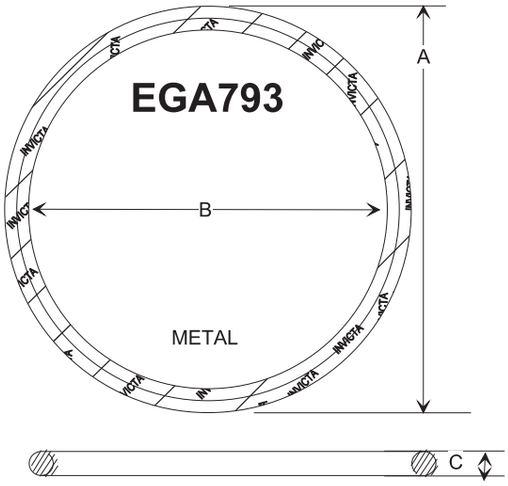

A-2-1/4" B-2" C- 1/8"

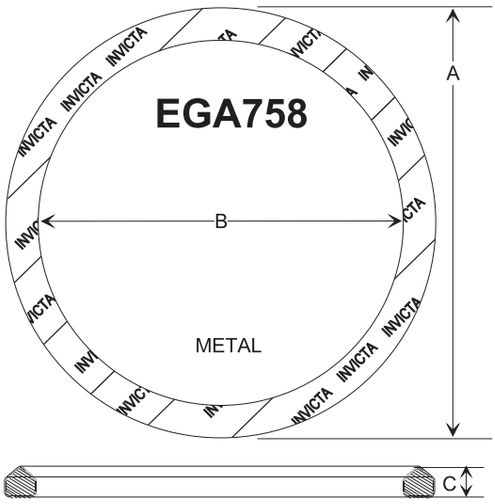

A-2-3/8" B-2" C- 3/16"

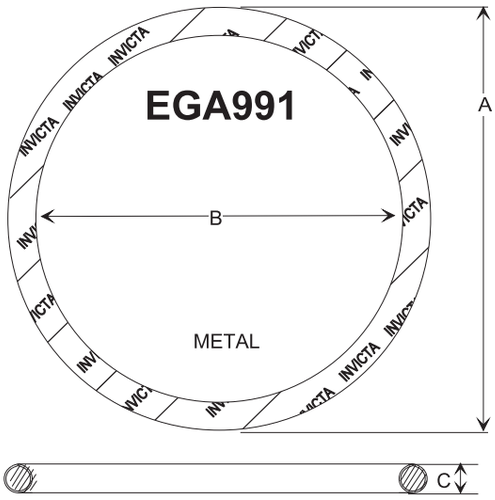

A-2-11/32" B-2-1/32" C- 5/32"

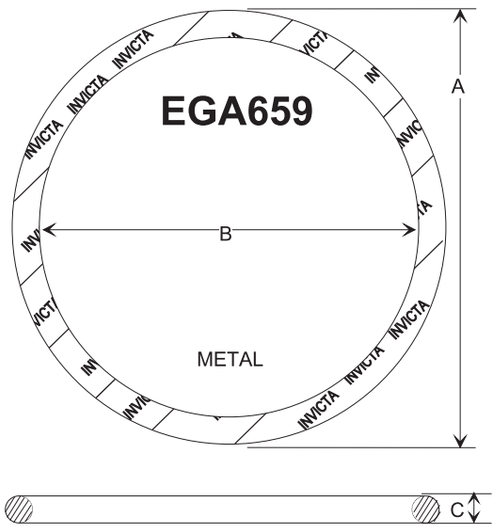

A-2-13/32" B-2-3/32" C- 5/32"

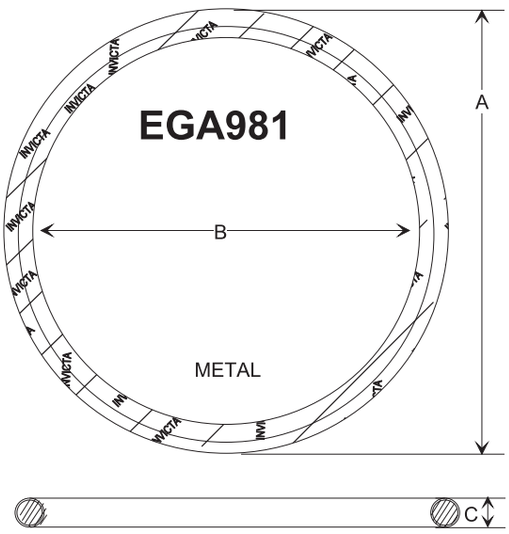

A-2-7/16" B-2-5/32" C- 5/32"

DESIGN STYLE 4

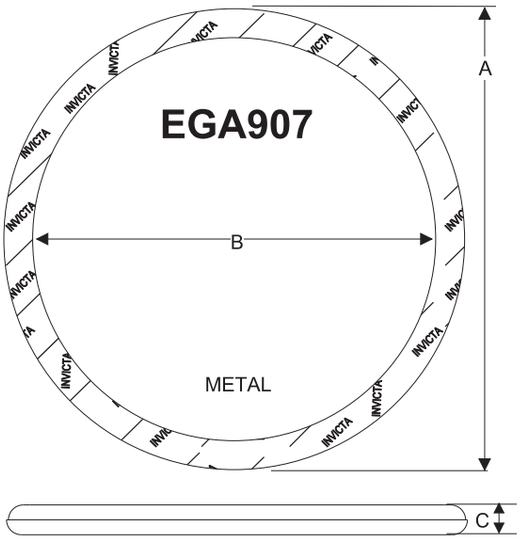

A-2-9/16" B-2-7/32" C- 5/32"

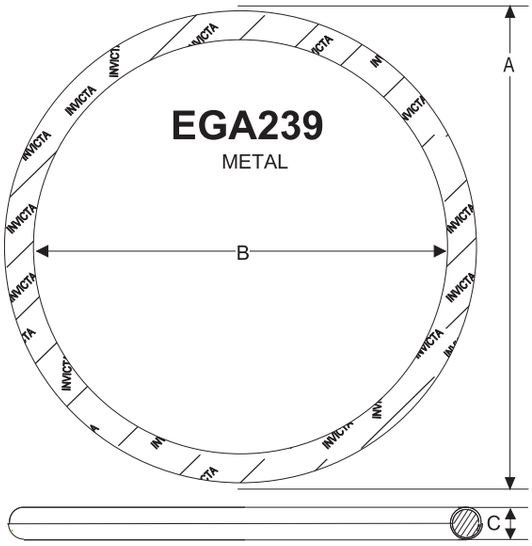

A-2-5/8" B-2-9/32" C- 3/16"

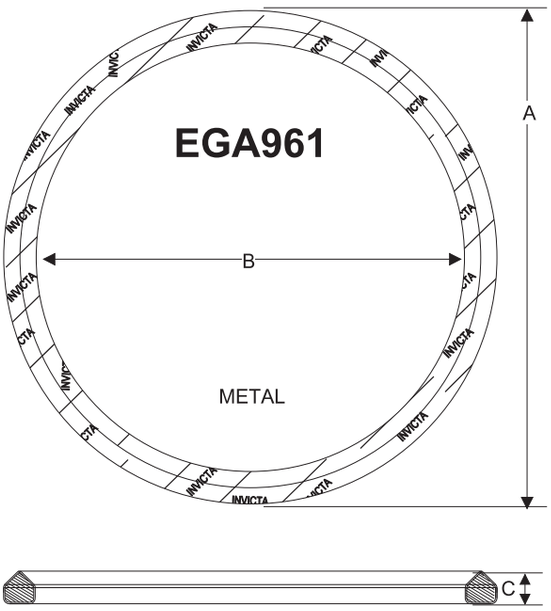

A-2-3/4 B-2-3/8" C- 3/16"

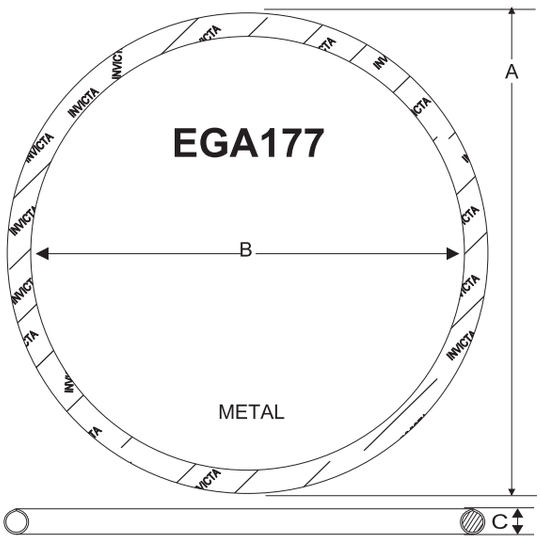

A-2-21/32" B-2-13/32" C- 5/32"

DESIGN STYLE 4

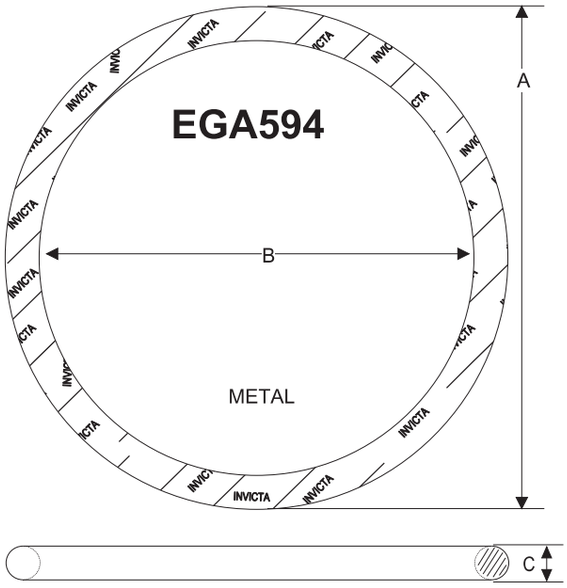

A-2-25/32" B-2-13/32" C-7/32"

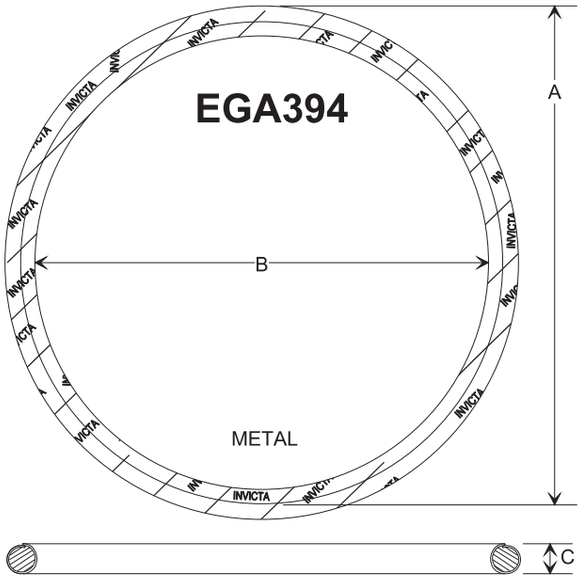

A-2.84" B-2.51" C-.17"

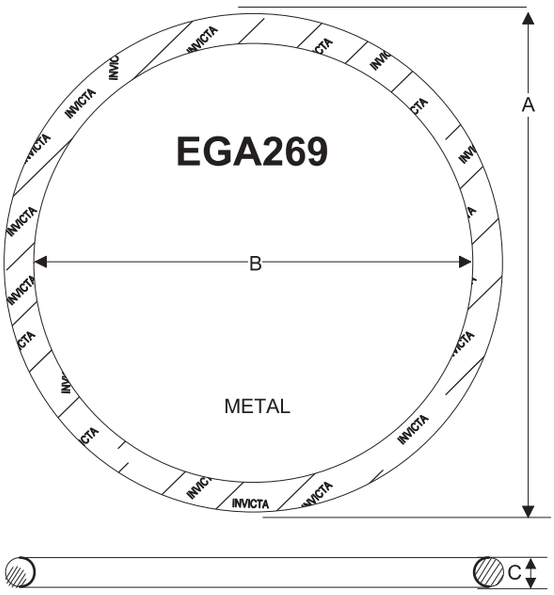

A-2-3/4" B-2-7/16" C-5/32"

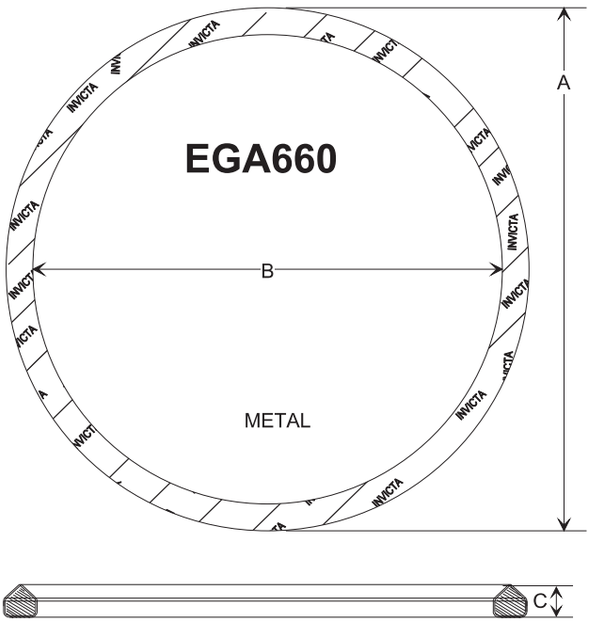

A-2-29/32" B-2-19/32" C-5/32"

DESIGN STYLE 4

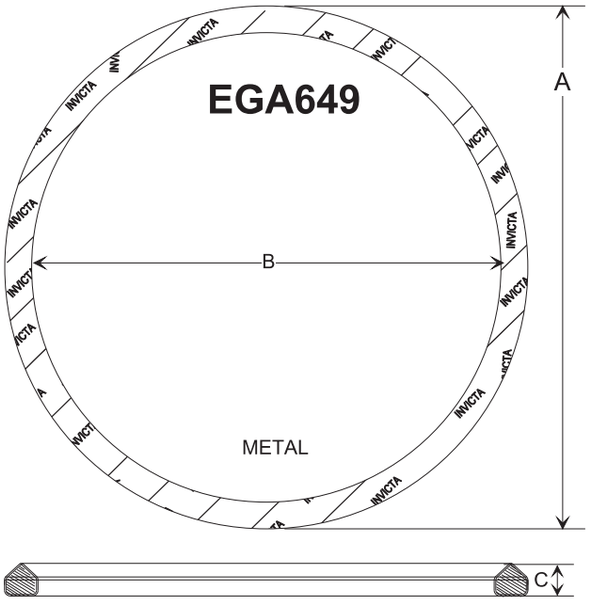

A-2-29/32" B-2-19/32" C-5/32"

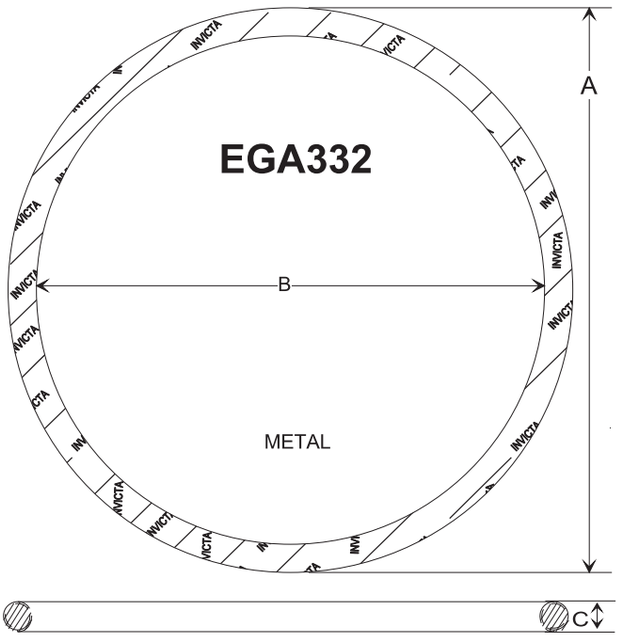

A-3-1/8" B-2-13/16" C-5/32"

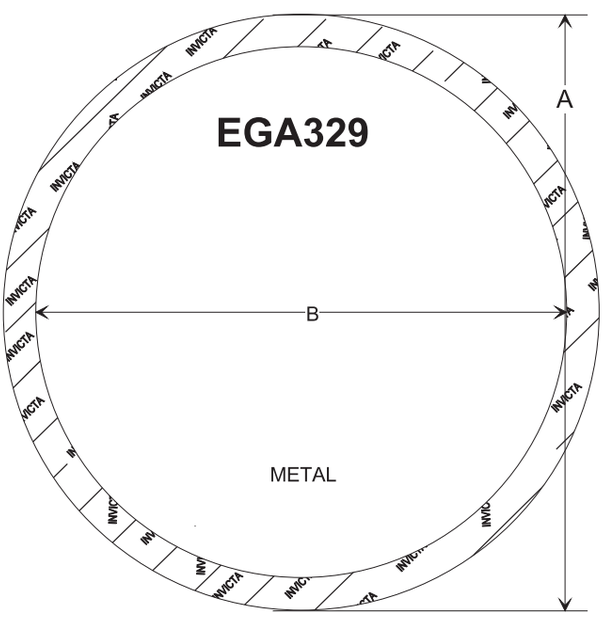

A-3-9/32"

B-2-15/16"

C-3/16"

DESIGN STYLE 5

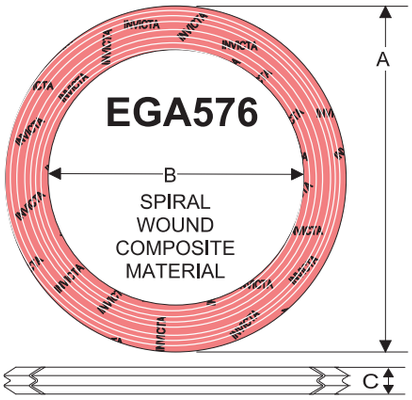

A-1.94" B-1.45" C-.21"

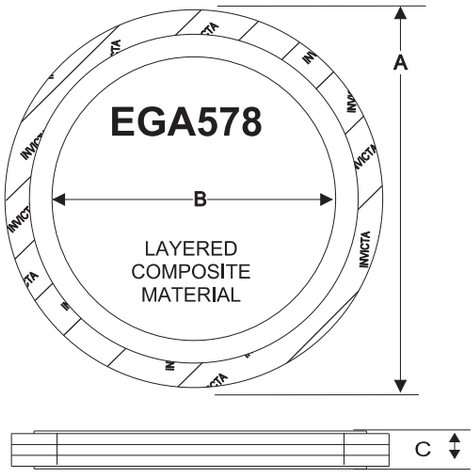

A-2.09" B-1.57" C-.21"

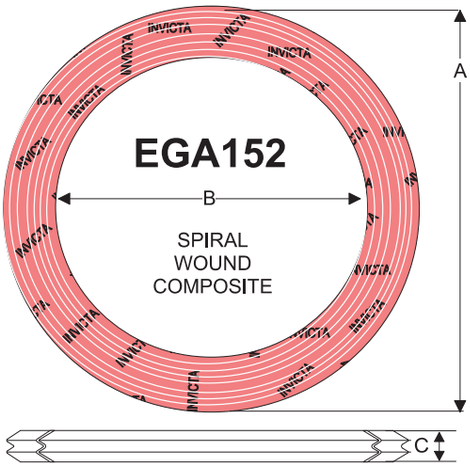

A-2.23" B-1.72" C-.18"

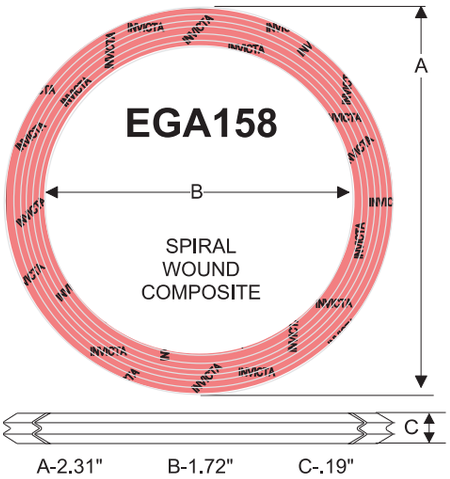

A-2.31" B-1.72" C-.19"

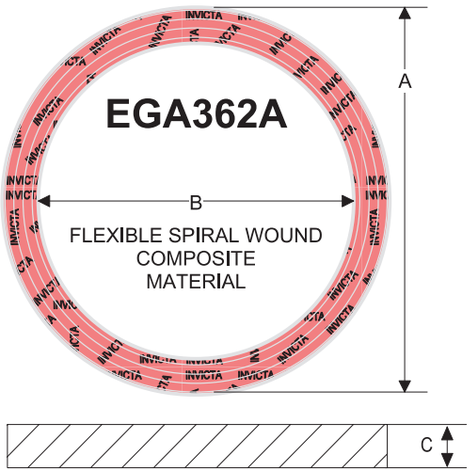

A-2.14" B-1.73" C-.25"

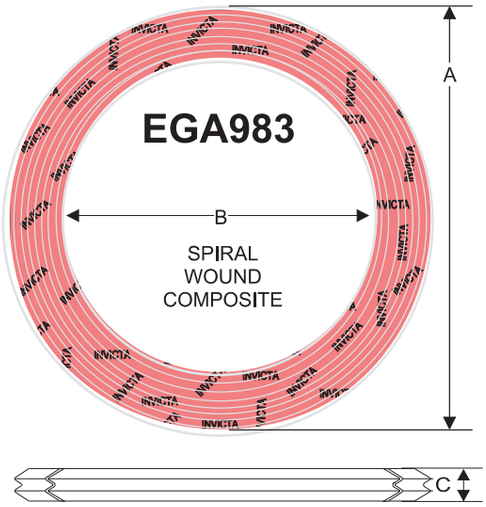

A-2.35" B-1.73" C-.22"

DESIGN STYLE 5

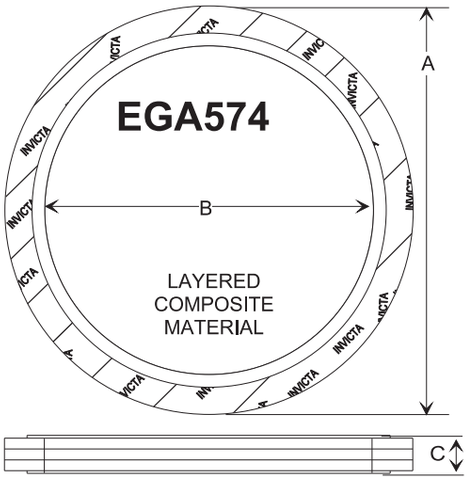

A-2.26" B-1.75" C-.18"

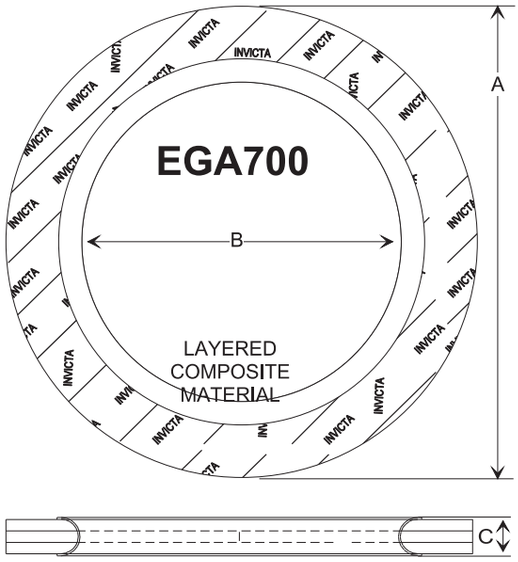

A-2.57" B-175" C-.19"

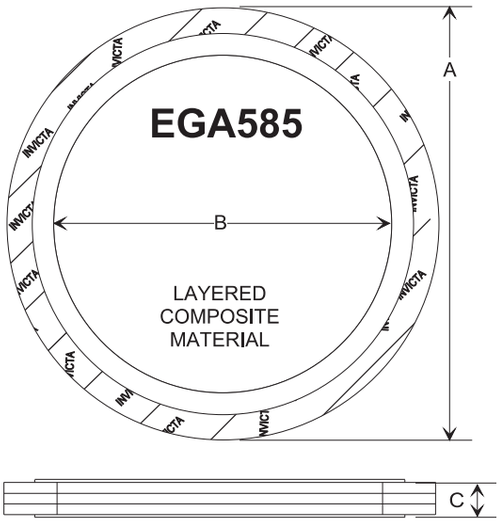

A-2.38" B-1.88" C-.18"

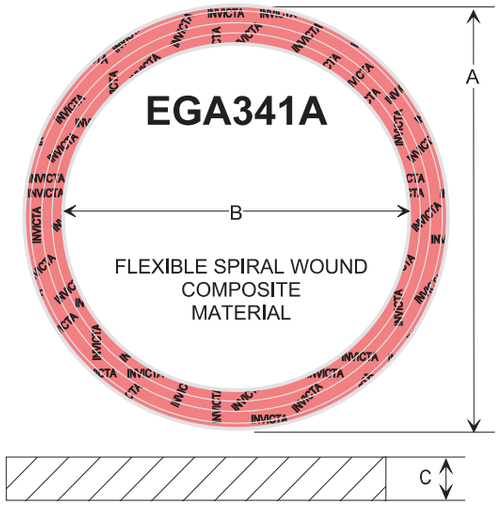

A-2.34" B-193" C-.25"

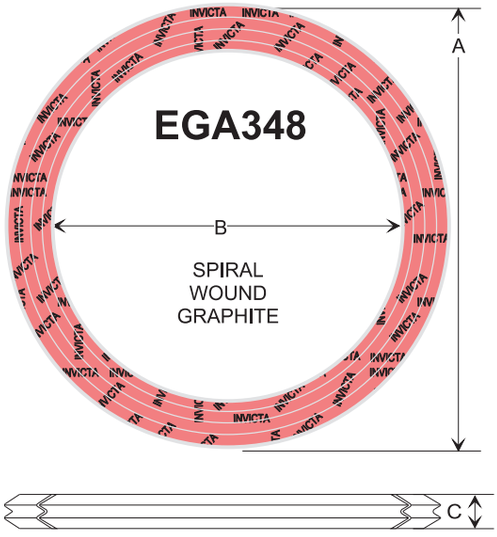

A-2.43" B-1.93" C-.20"

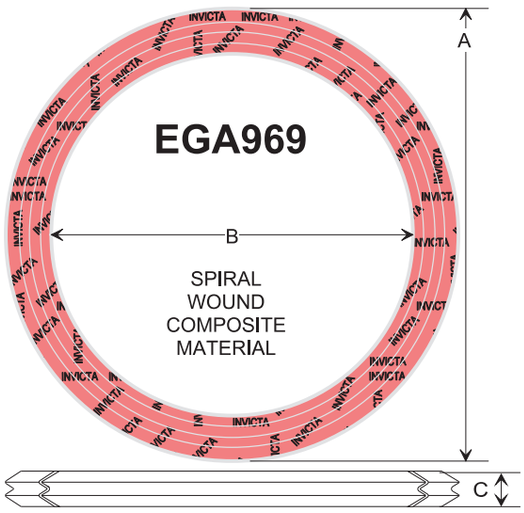

A-2.49" B-1.94" C-.18"

DESIGN STYLE 5

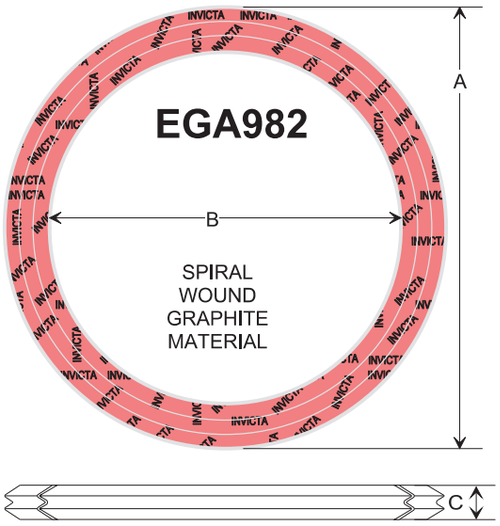

A-2.45" B-1.95" C-.16"

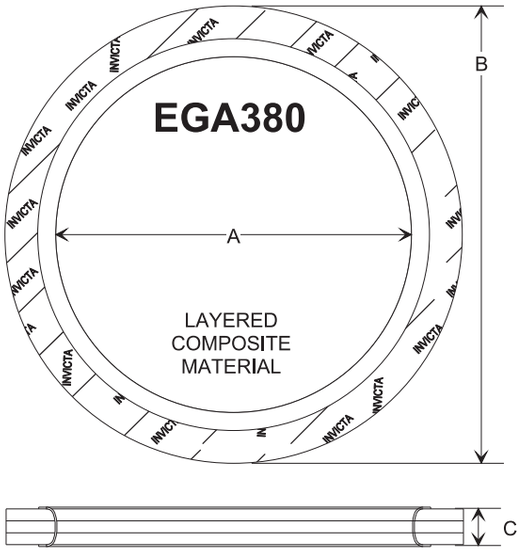

A-1.97" B-2.53" C-.20"

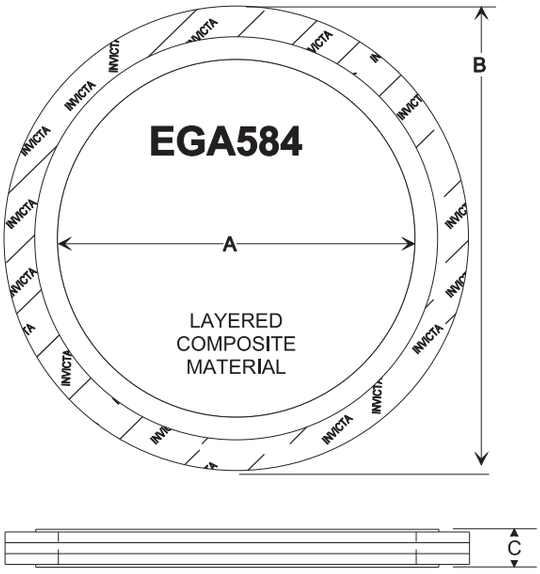

A-2.57" B-1.98" C-.19"

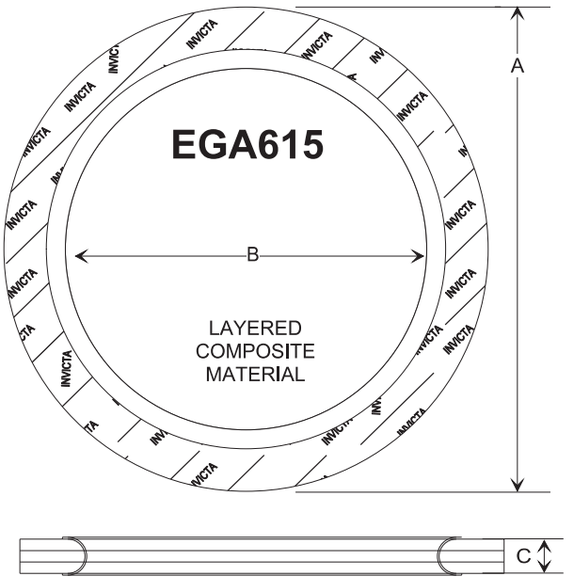

A-2.68" B-2.0" C-.19"

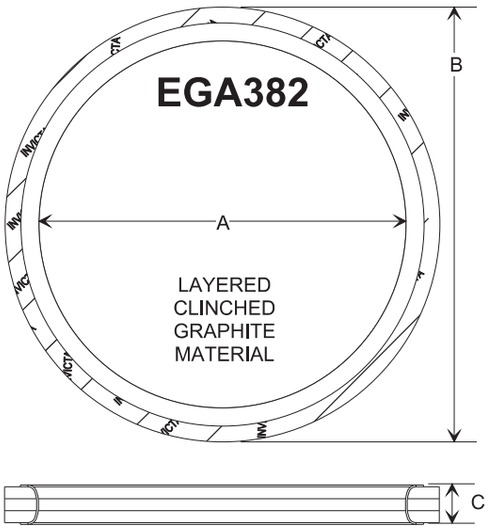

A-2.03" B-2.46" C-.20"

DESIGN STYLE 5

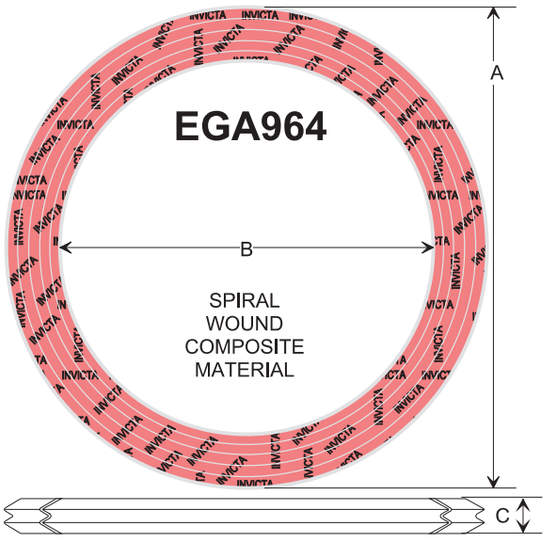

A-2.65" B-2.05" C-.18"

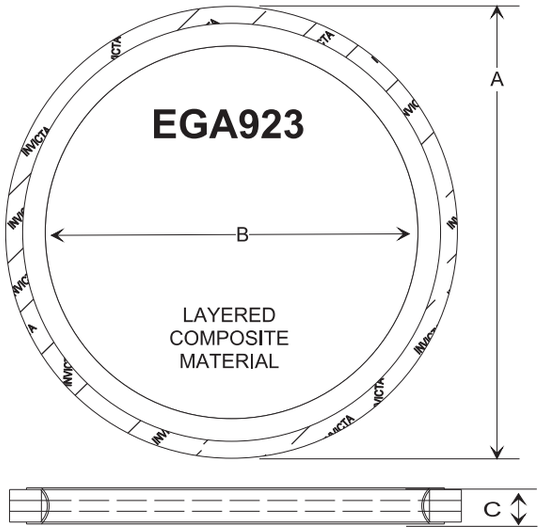

A-2.50" B-2.08" C-.18"

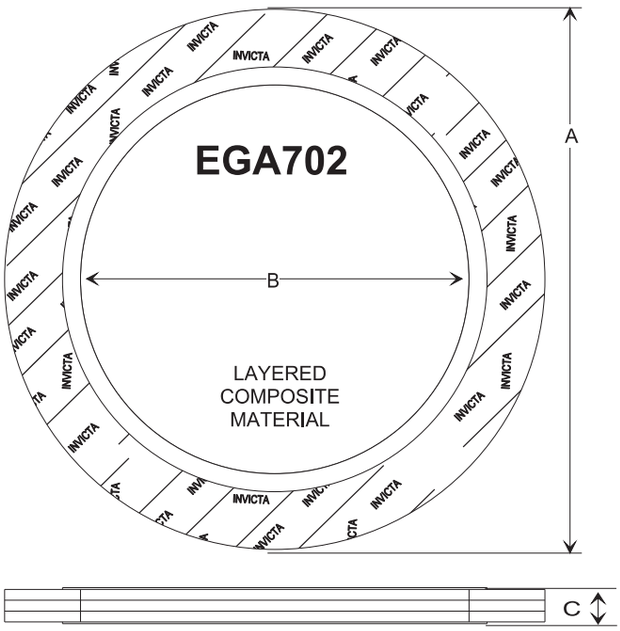

A-2.99" B-2.13" C-.21"

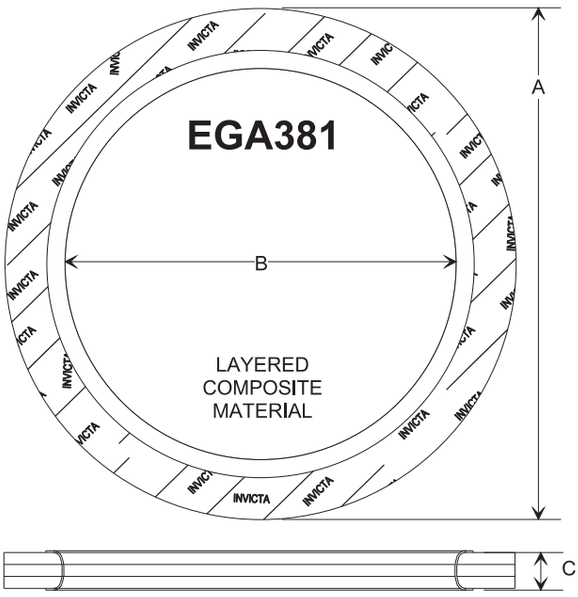

A-2.83" B-2.17" C-.20

DESIGN STYLE 5

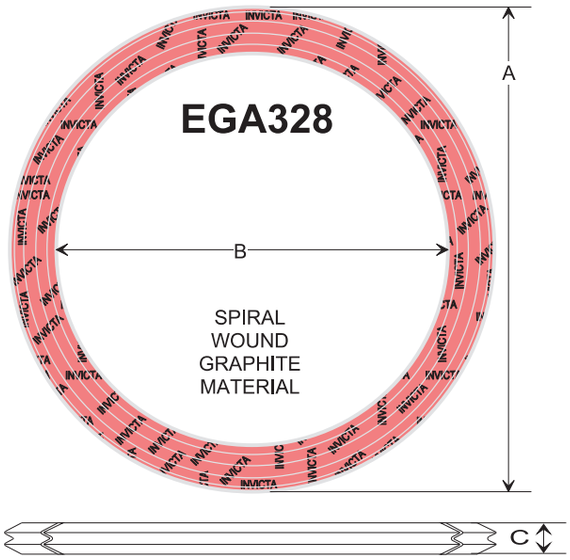

A-2-21/32" B-2-5/32" C-13/64"

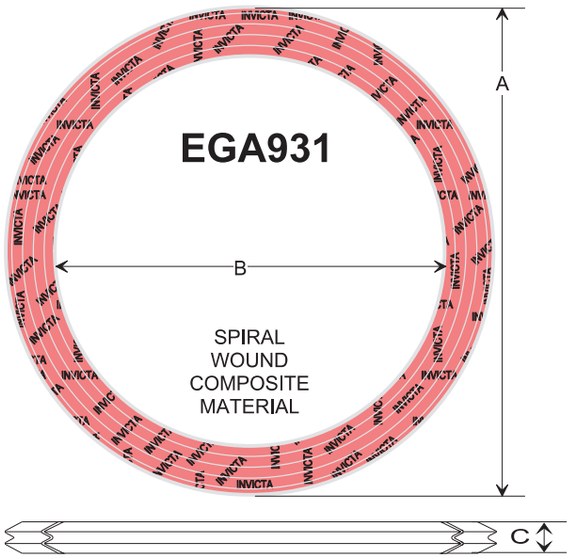

A-2.70" B-2.17" C-.18"

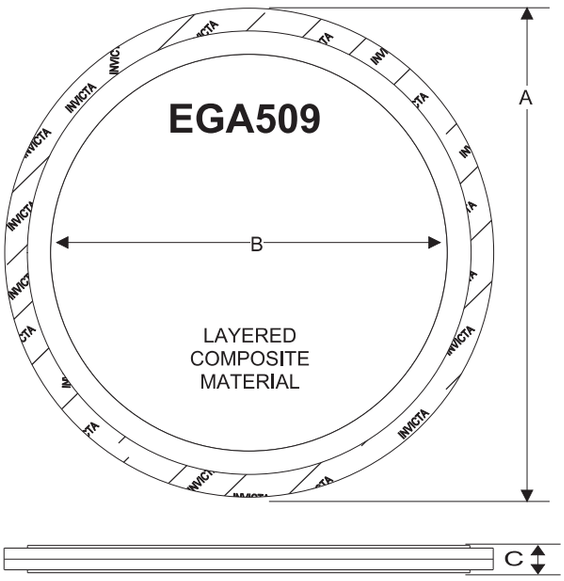

A-2.72" B-2.20" C-.19"

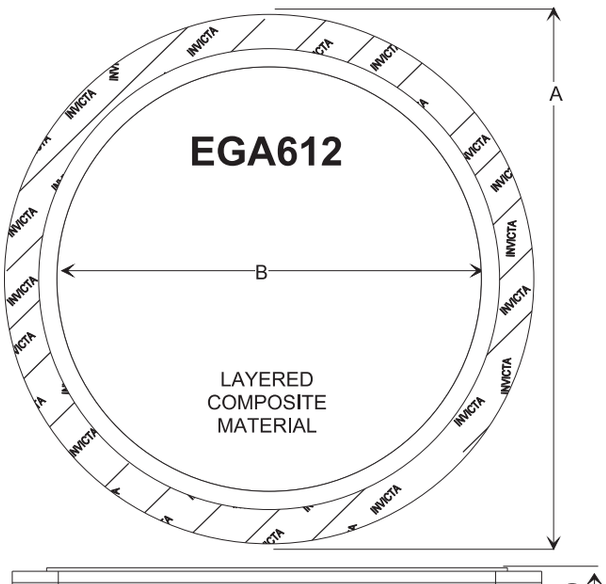

A-3.0" B-2.44" C-.20"

DESIGN STYLE 5

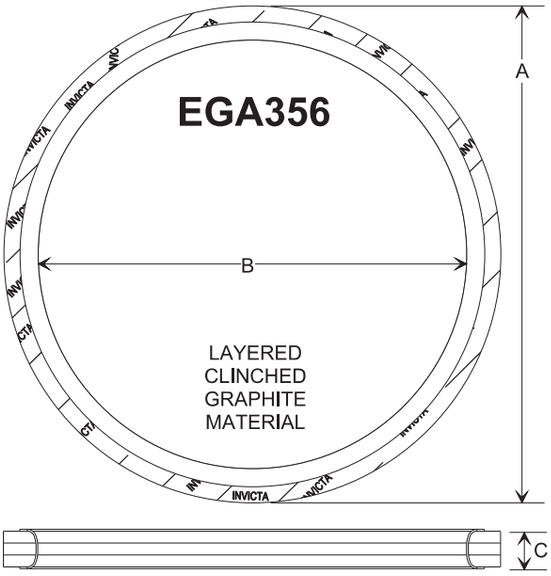

A-2.75" B-2.37" C-.20"

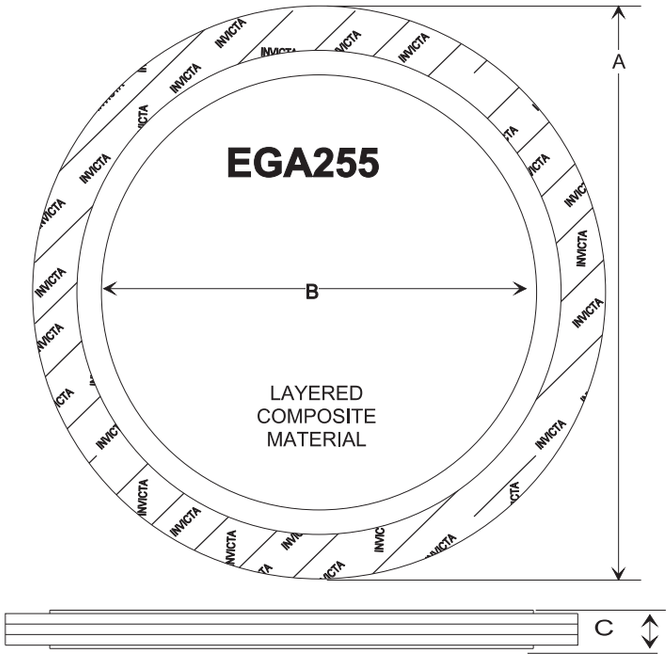

A-3.17" B-2.39" C-.20"

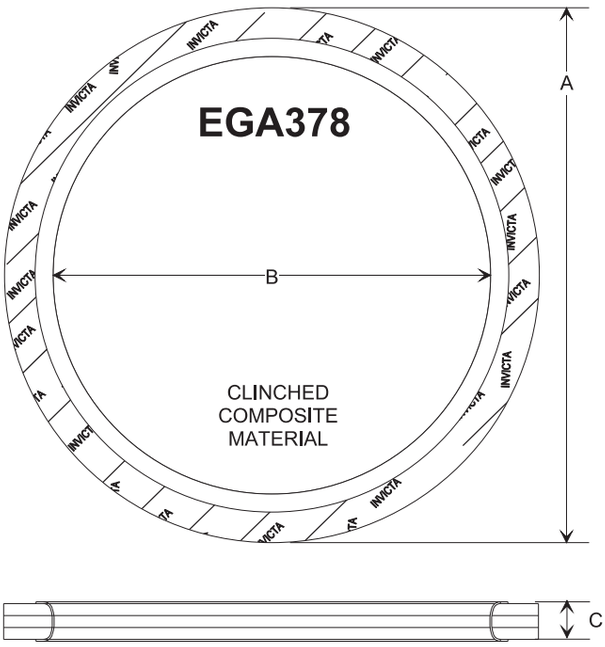

A-2.96" B-2.42" C-.20"

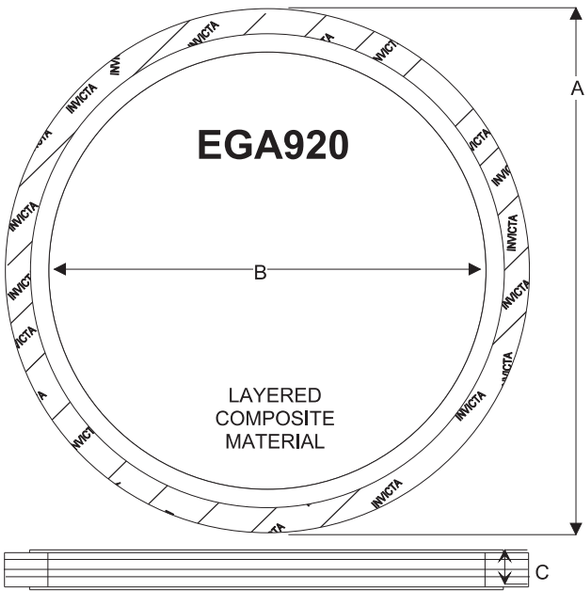

DESIGN STYLE 5

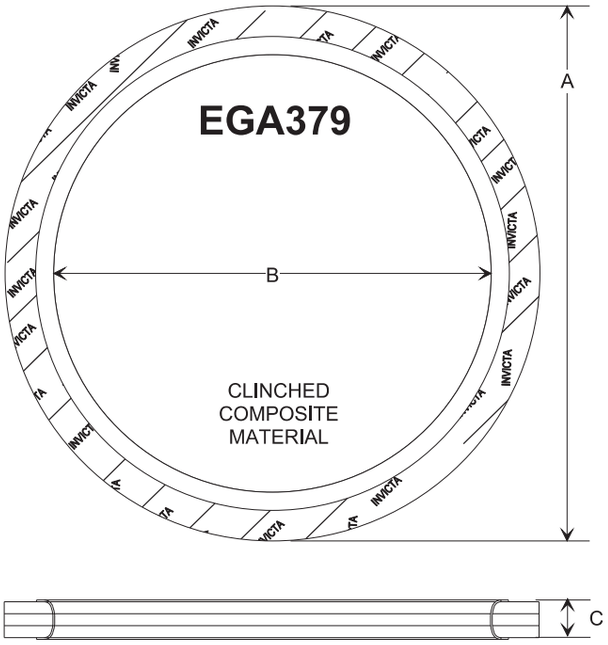

A-2.96" B-2.42" C-5/32"

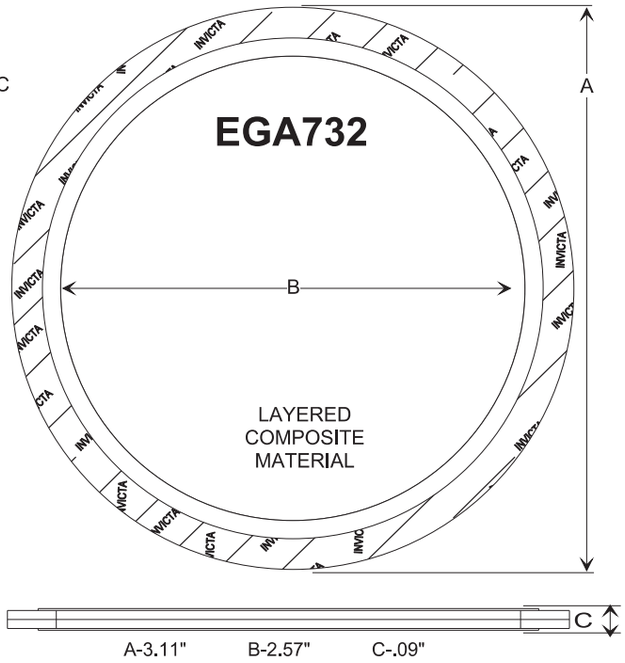

A-3.11" B-2.57" C-.09"

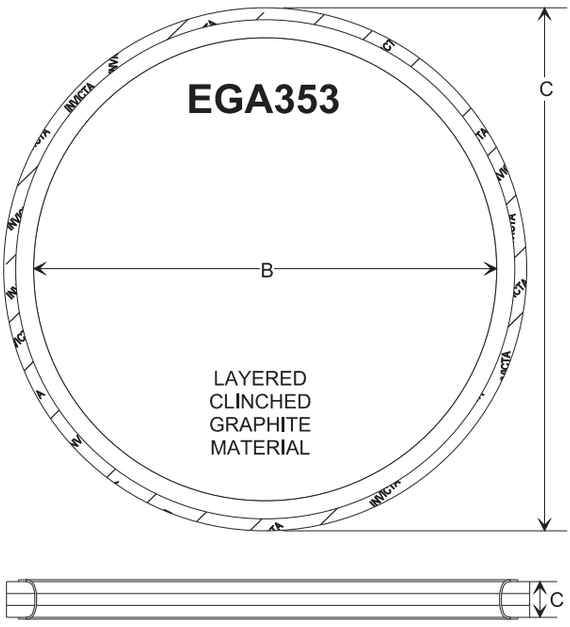

A-2.90" B-2.56" C-.20

DESIGN STYLE 5

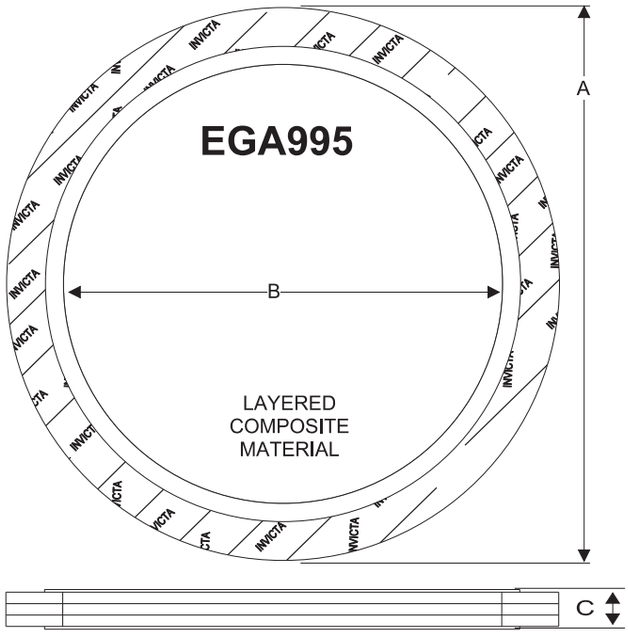

A-3.06" B-2.43" C-.18"

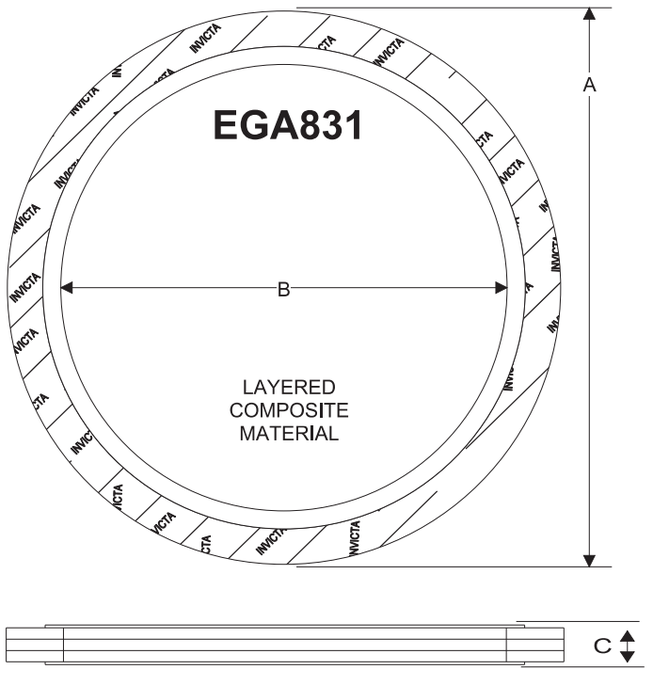

A-3.07" B-2.47" C- .19

DESIGN STYLE 5

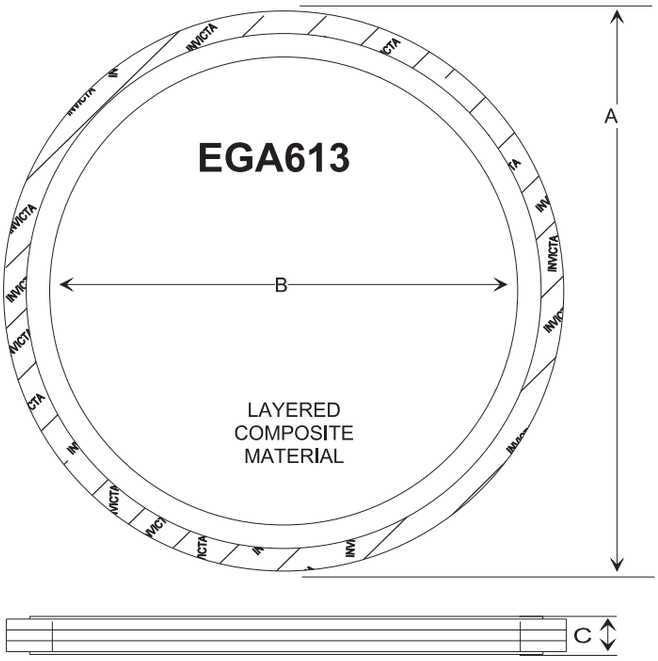

A-3.10" B-2.59" C-.24"

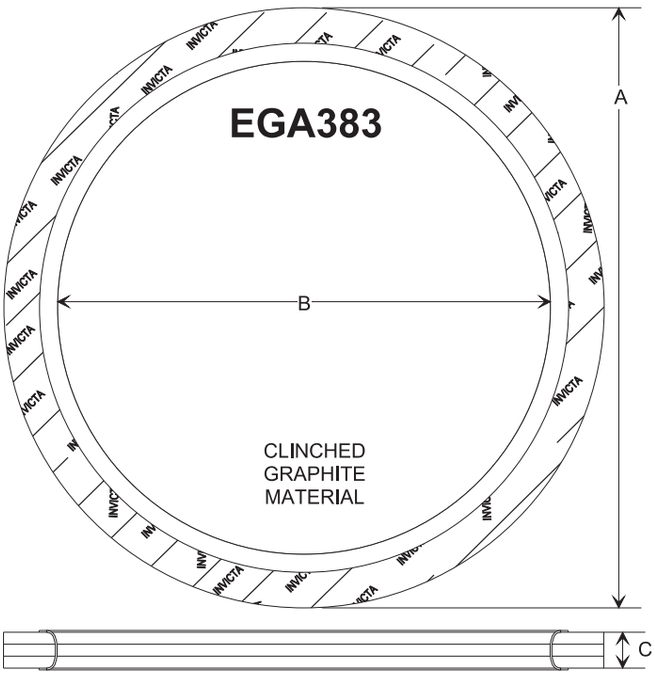

A-3.32" B-2.73" C-.20"

DESIGN STYLE 5

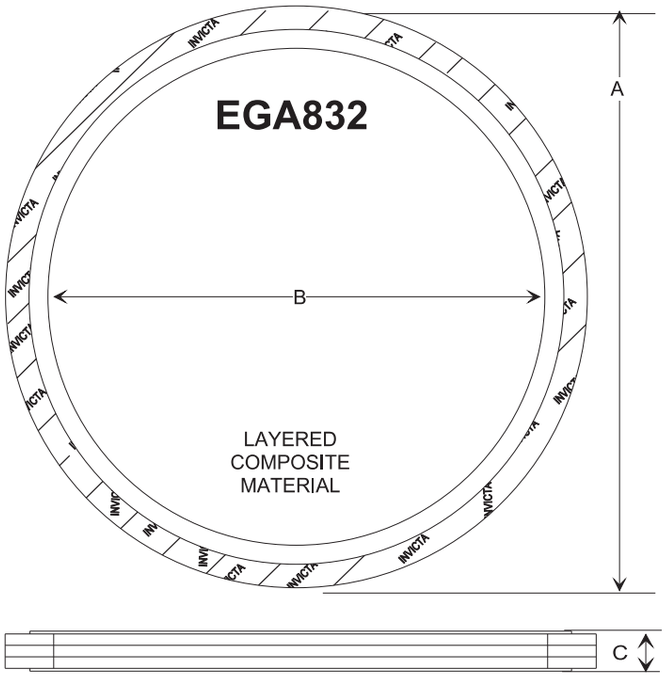

A-3.22" B-2.75" C-.20"

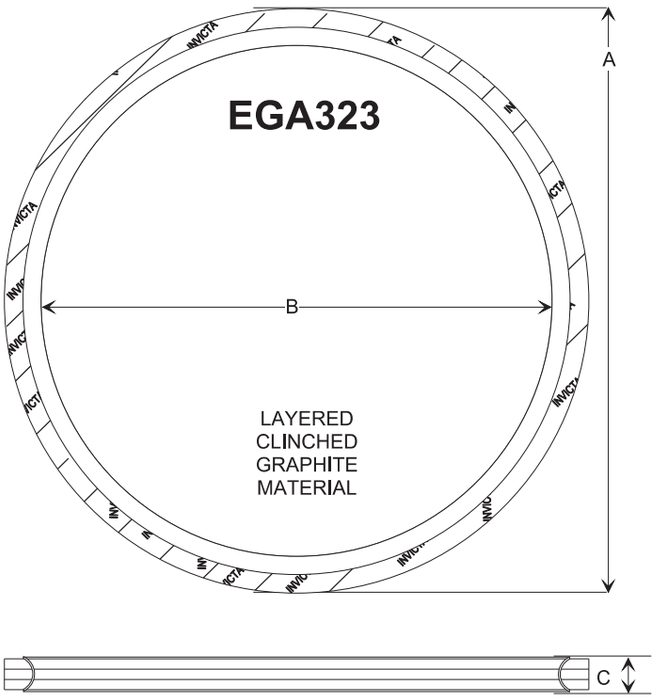

A-3.24" B-2.82" C-.177"

DESIGN STYLE 5

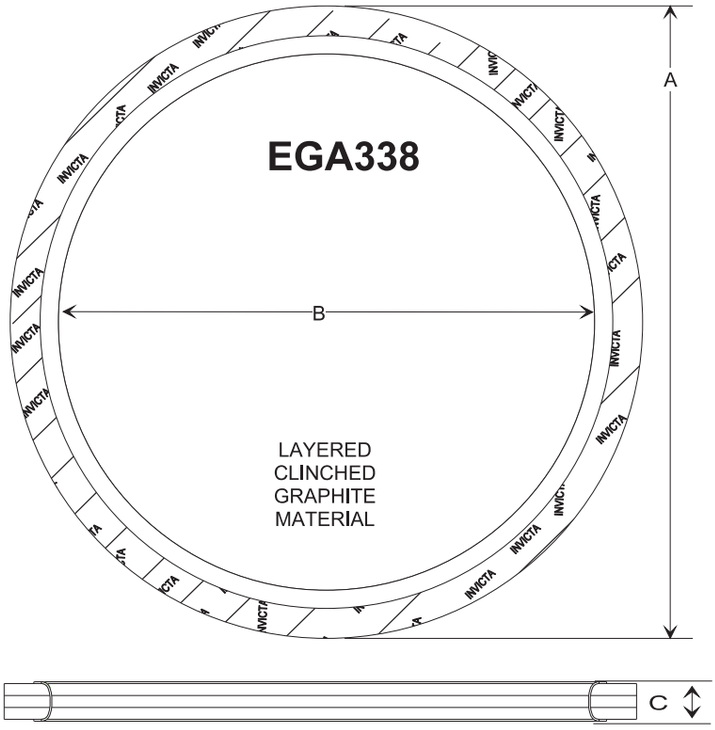

A-3.50" B-2.97" C-.21"

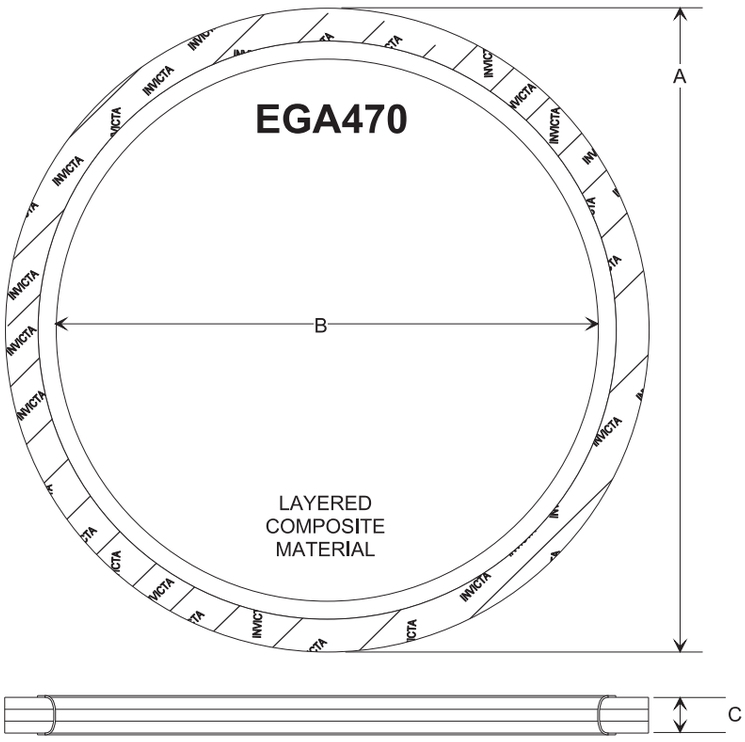

A-3.56" B-3.0" C-.20"

DESIGN STYLE 5

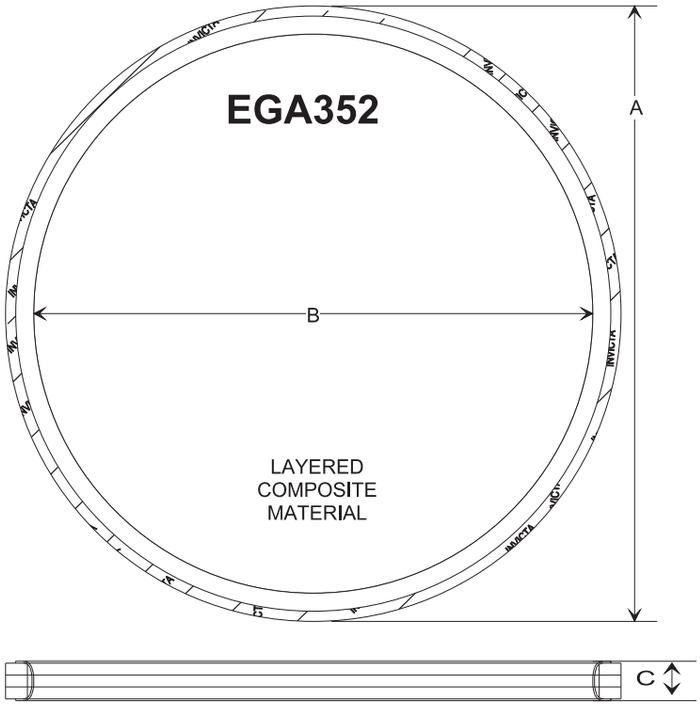

A-3.41 B-3.09" C-.20"

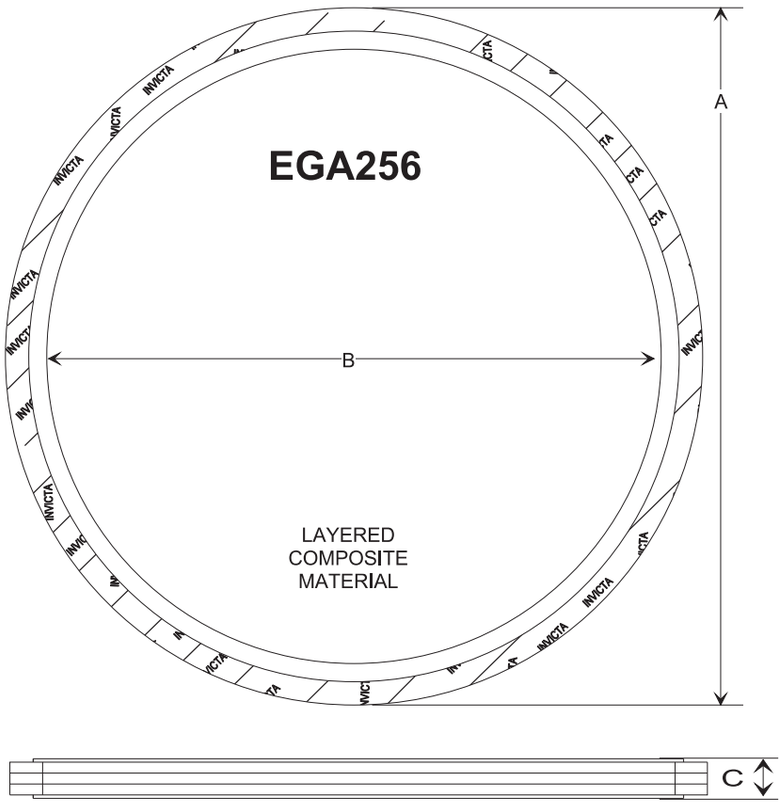

A-3.86" B-3.86" C-.19"

DESIGN STYLE 5

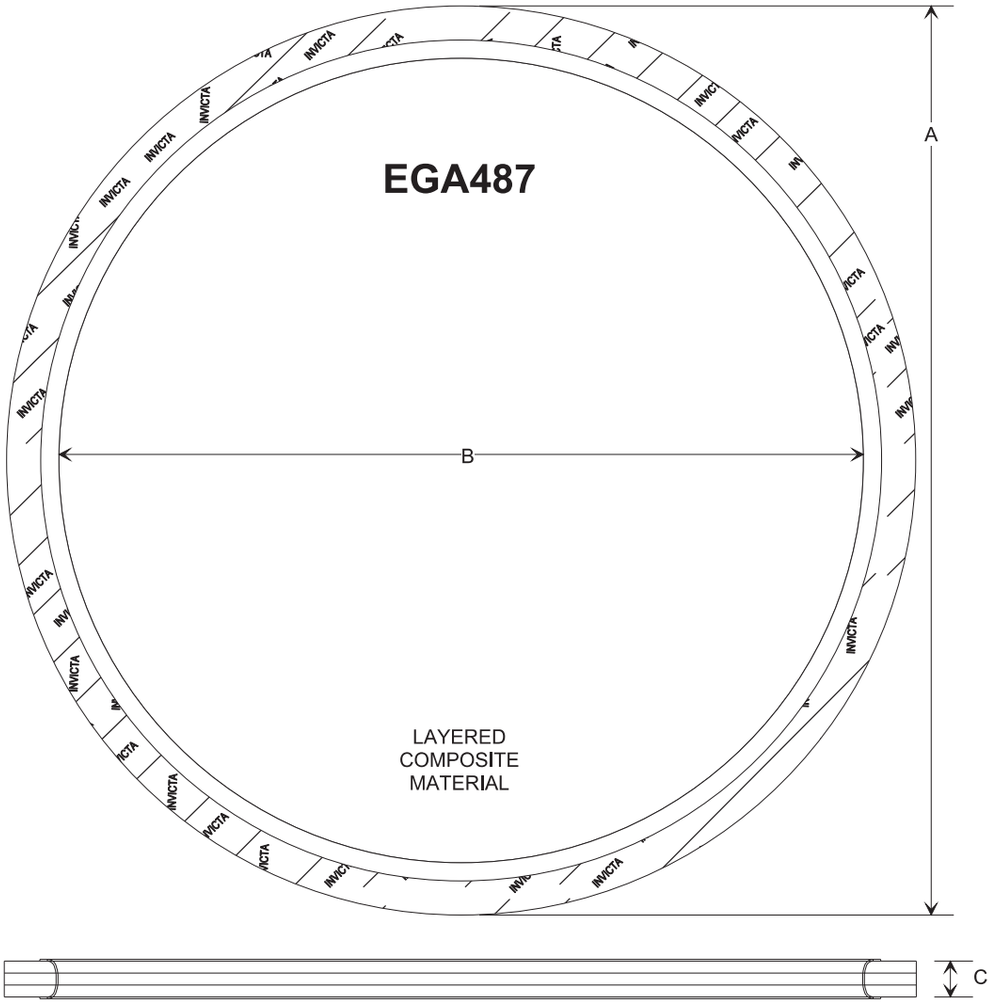

A-5.03" B-4.45" C-.20"

DESIGN STYLE 5

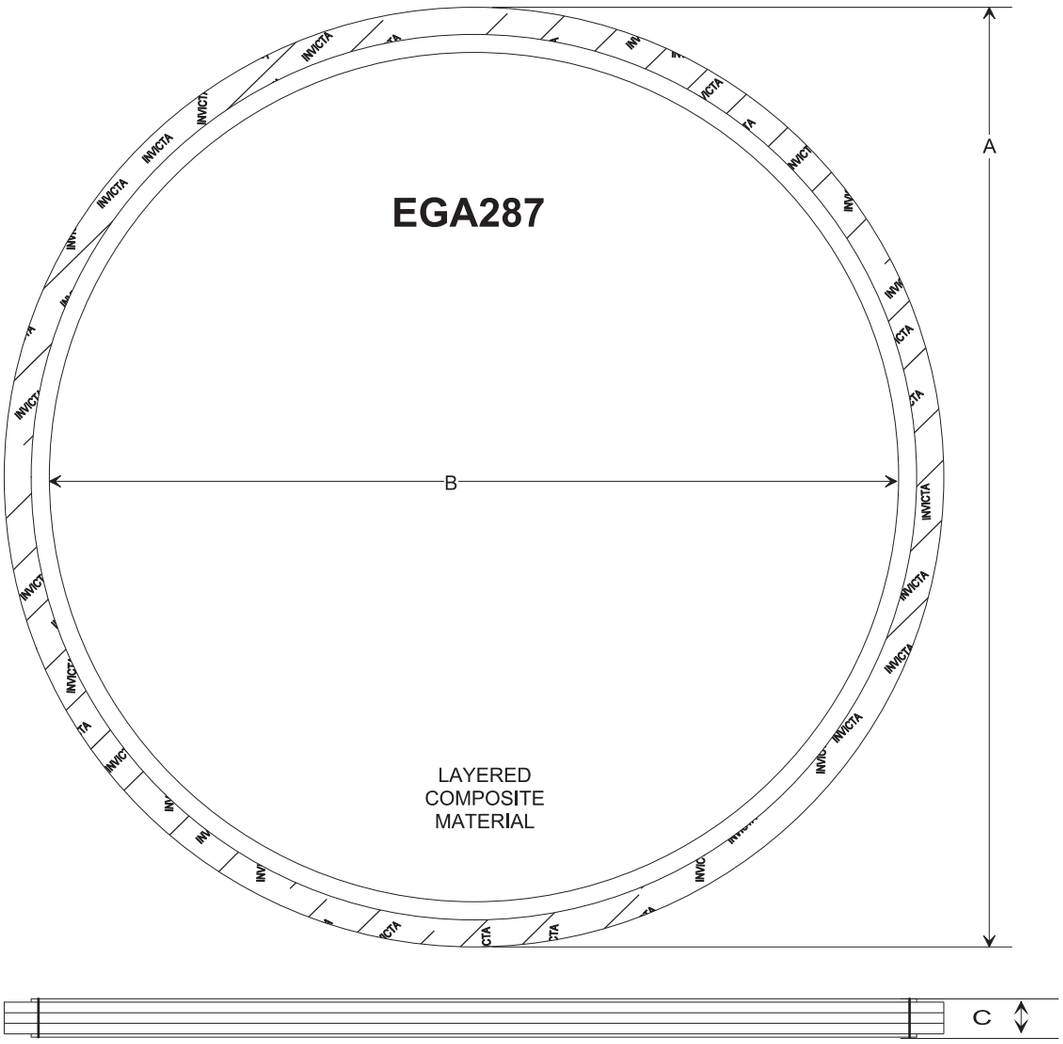

A-5.20" B-4.70" C-.21"

DESIGN STYLE 5

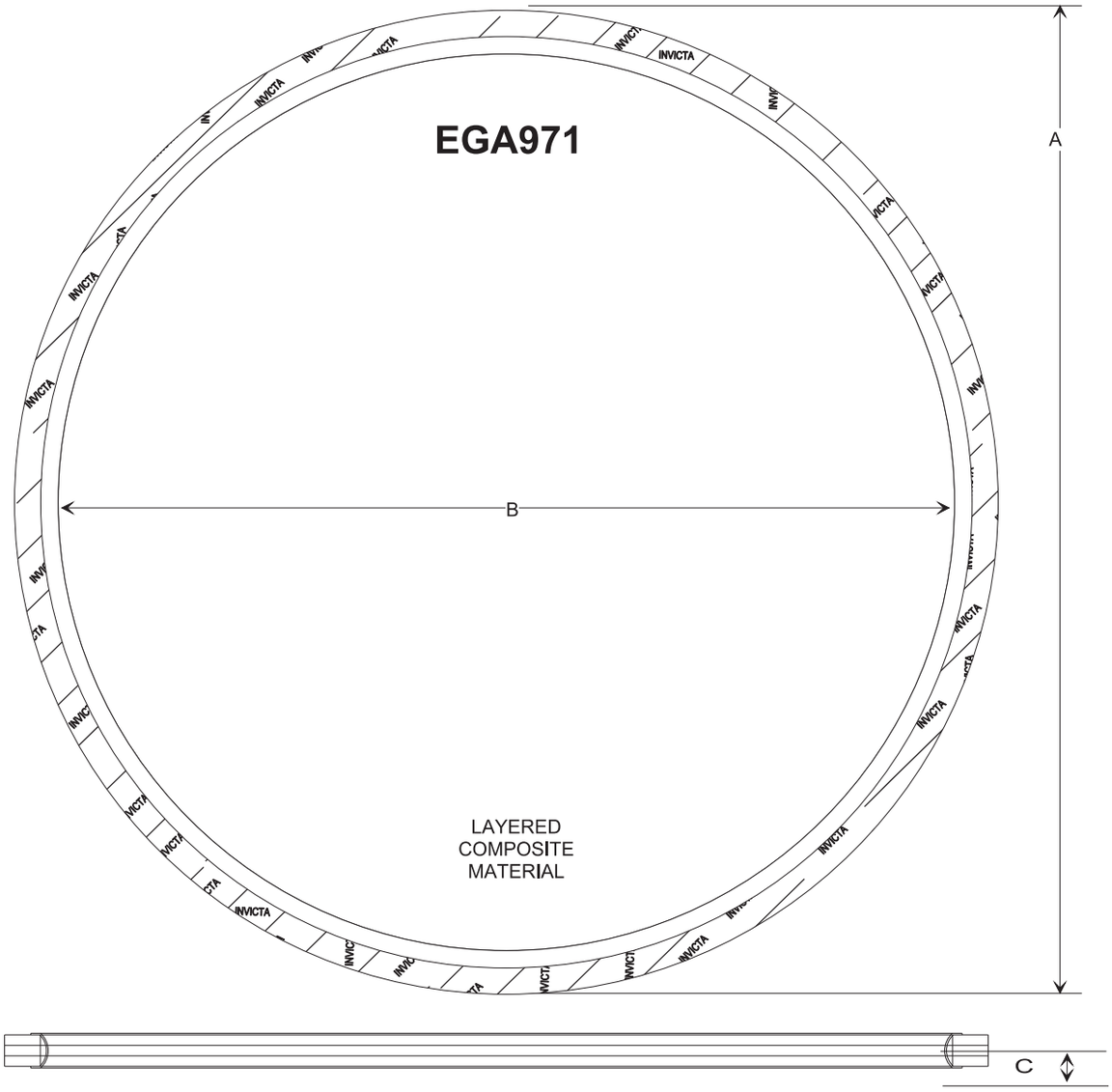

A-5.94" B-5.05" C-.17"

DESIGN STYLE 5

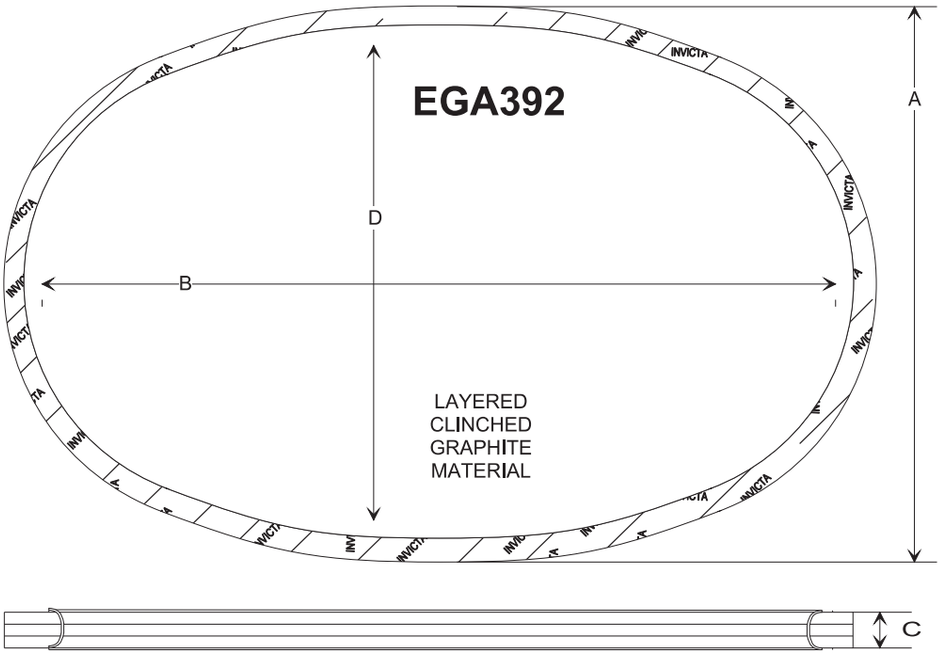

A-3.08" B-4.39" C-.20" D-2.64"

DESIGN STYLE 6

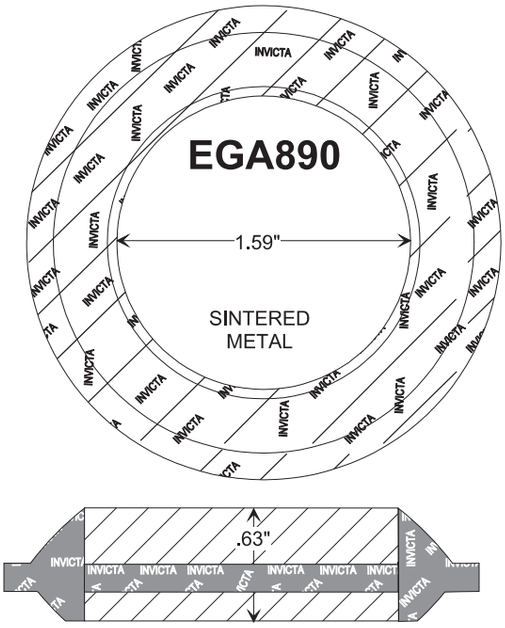

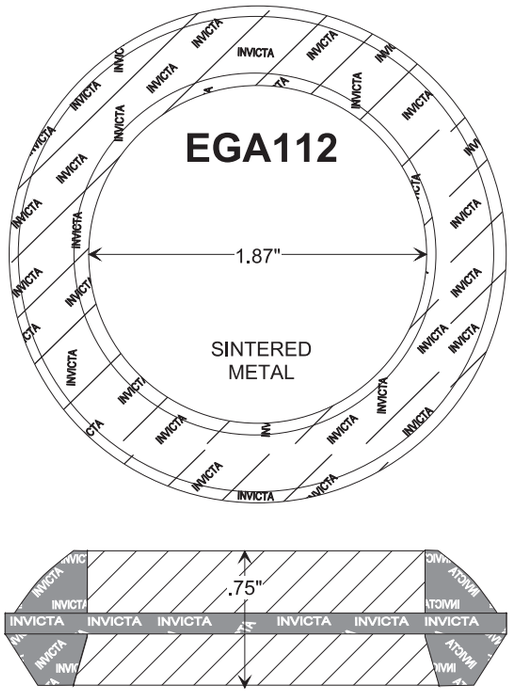

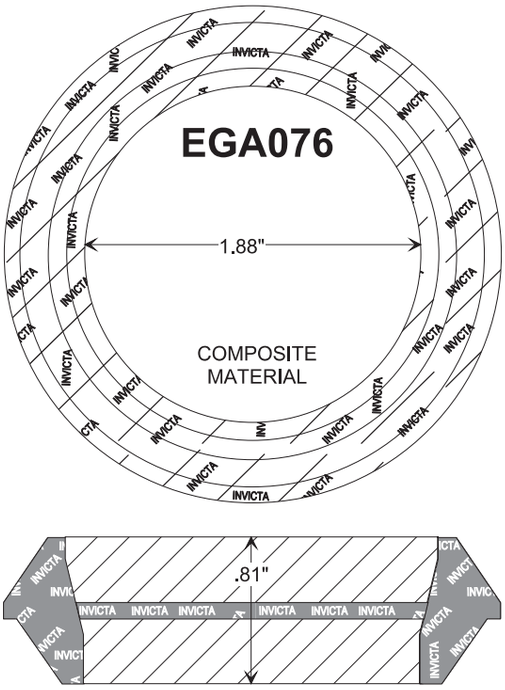

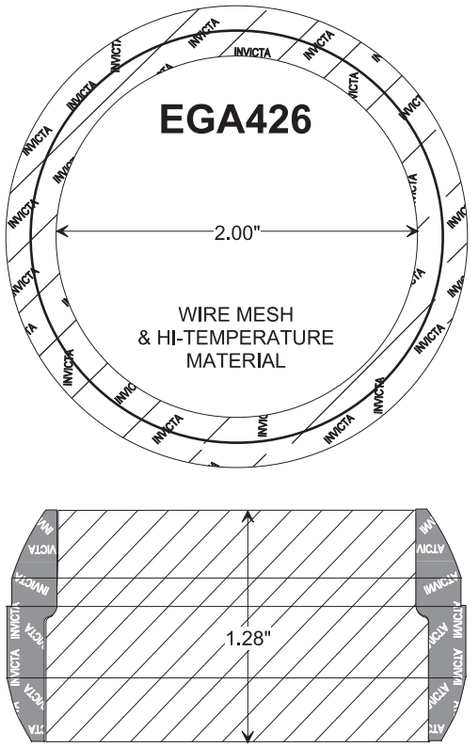

DESIGN STYLE 6

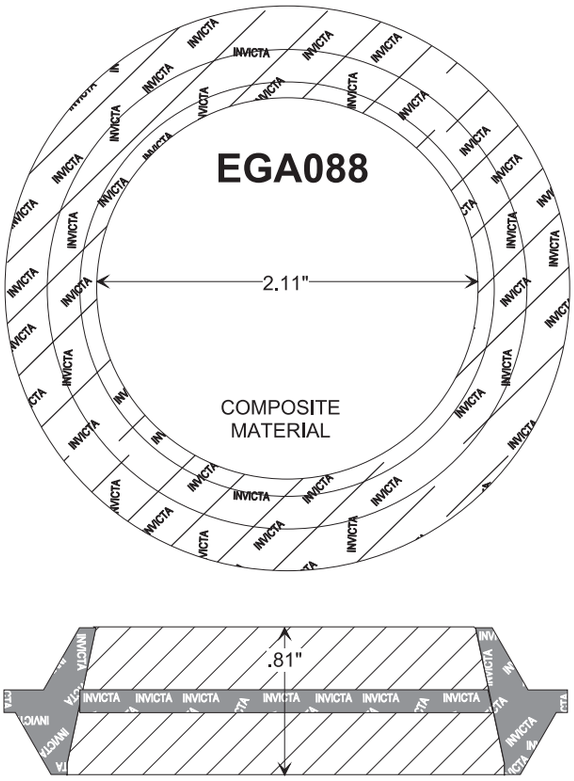

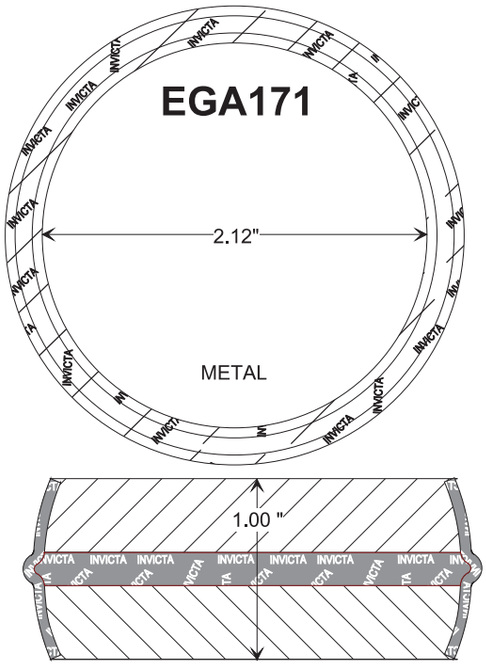

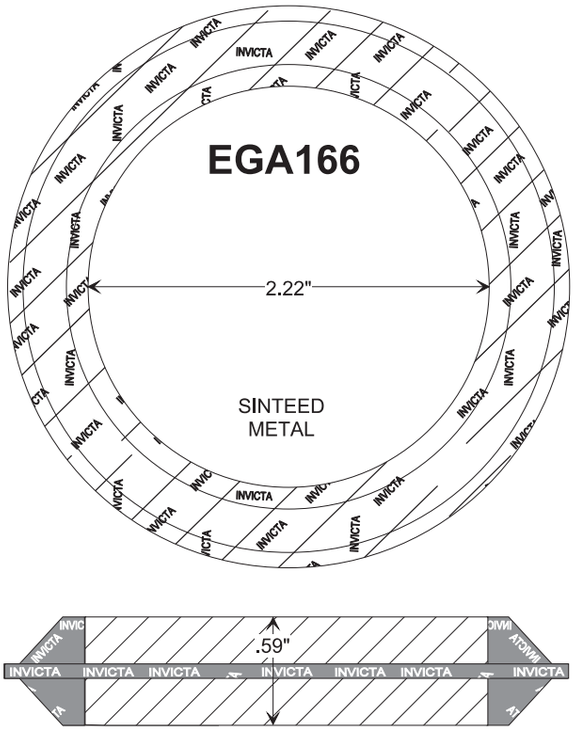

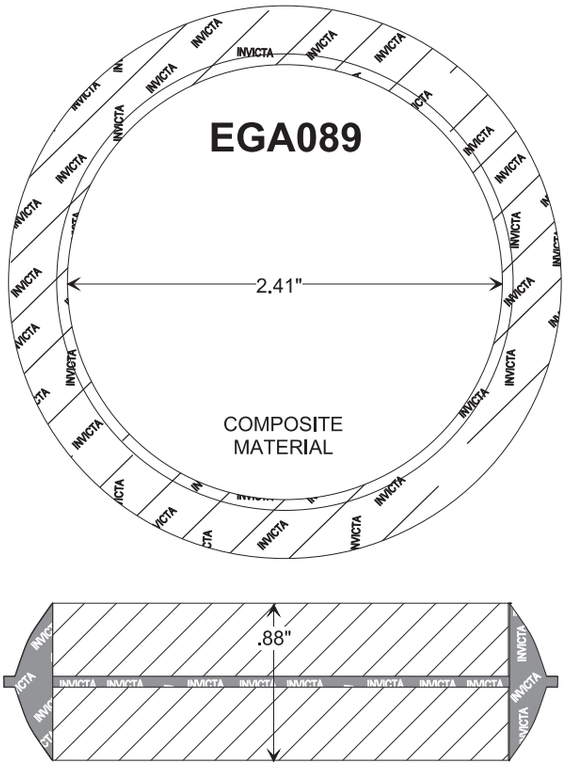

DESIGN STYLE 6

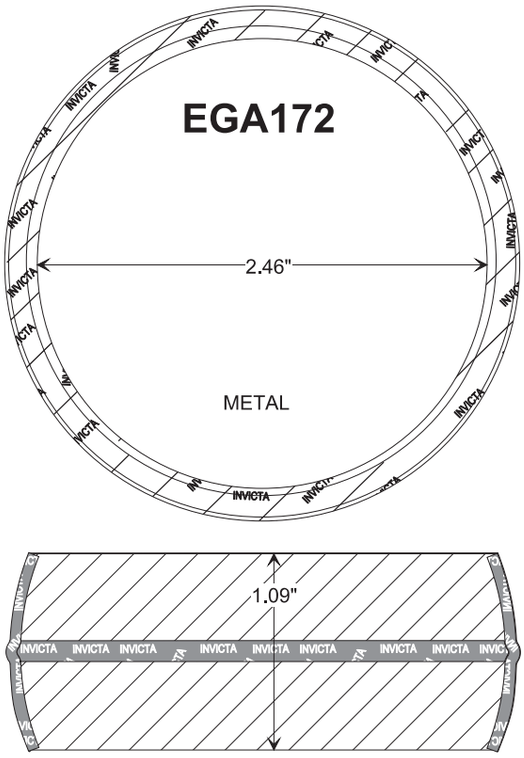

DESIGN STYLE 7

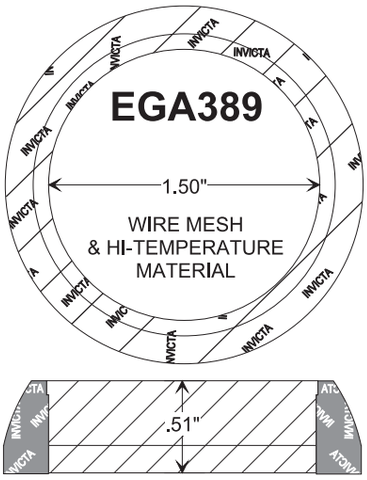

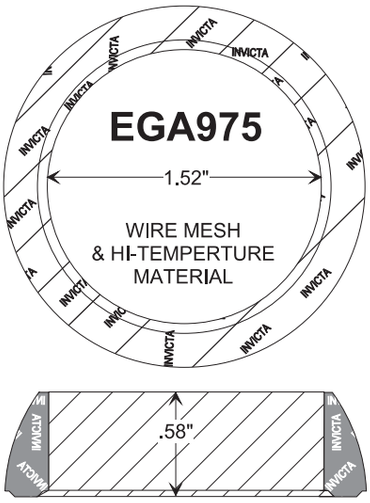

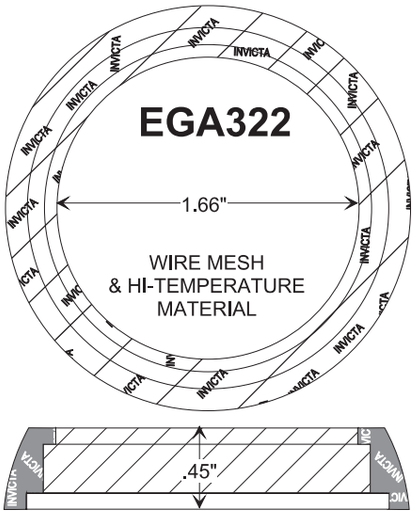

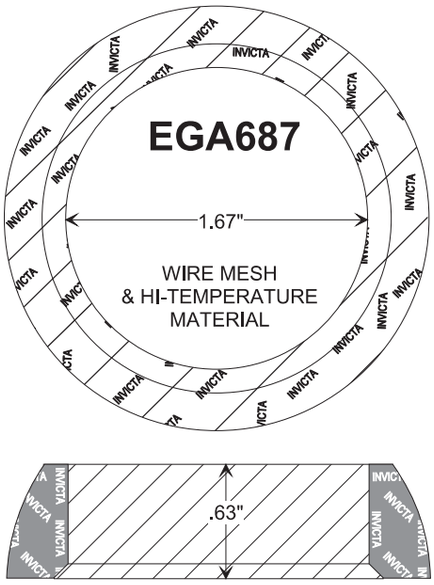

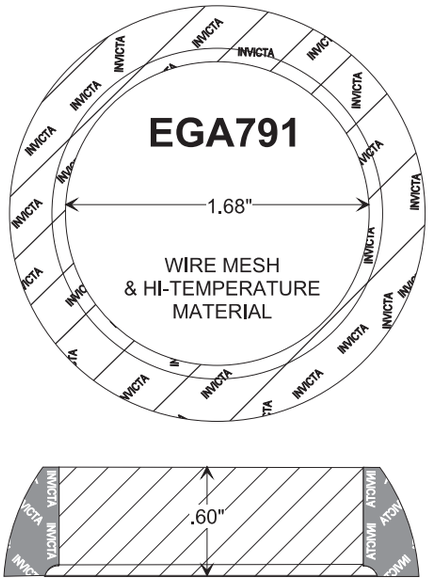

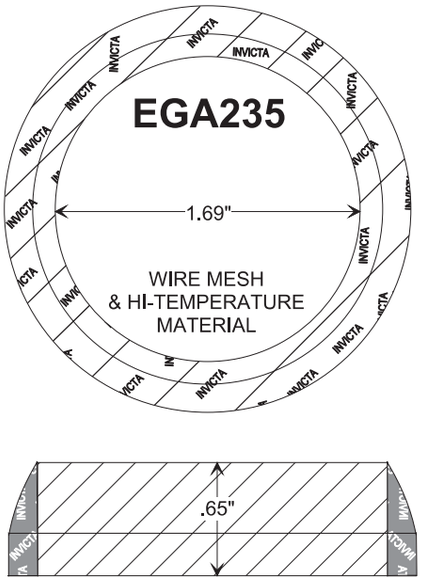

DESIGN STYLE 7

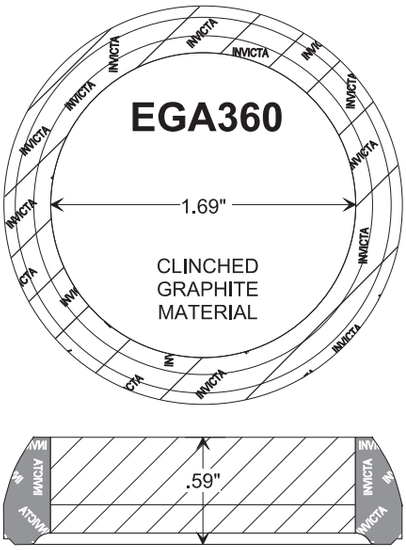

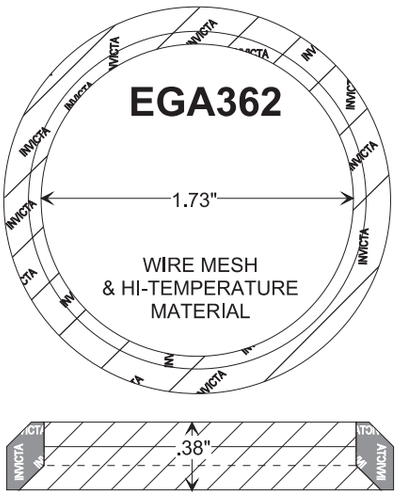

For OEM DESIGN USE EGA362A

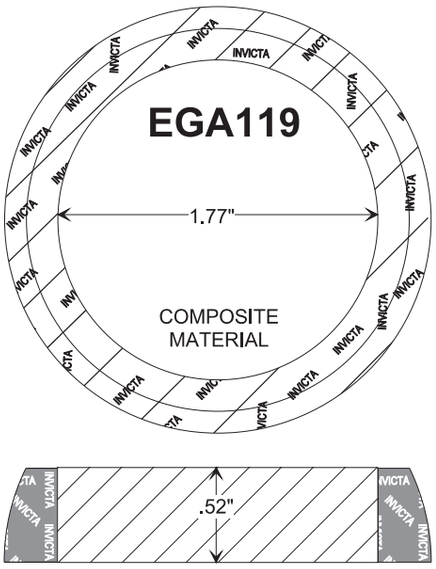

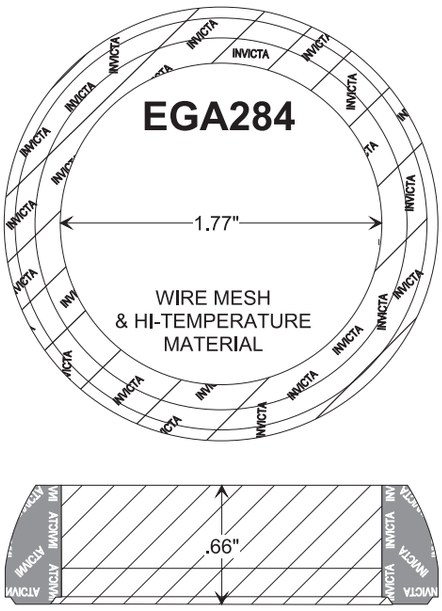

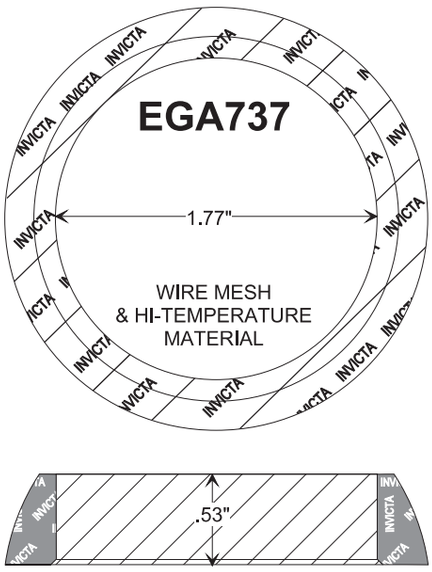

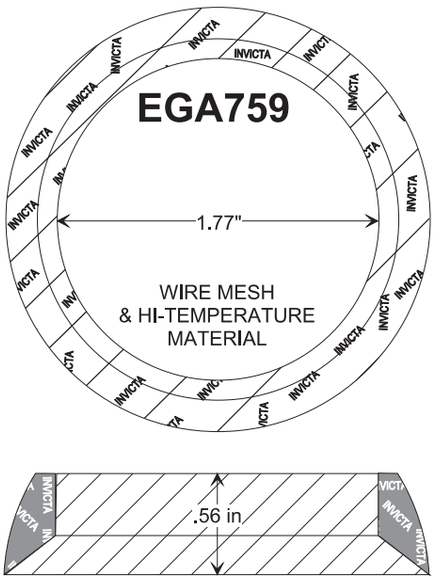

DESIGN STYLE 7

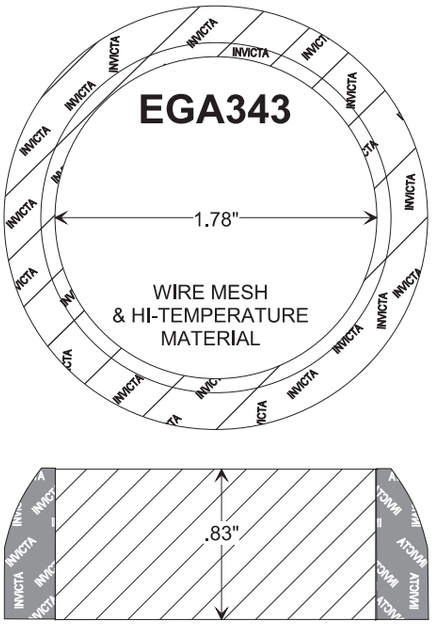

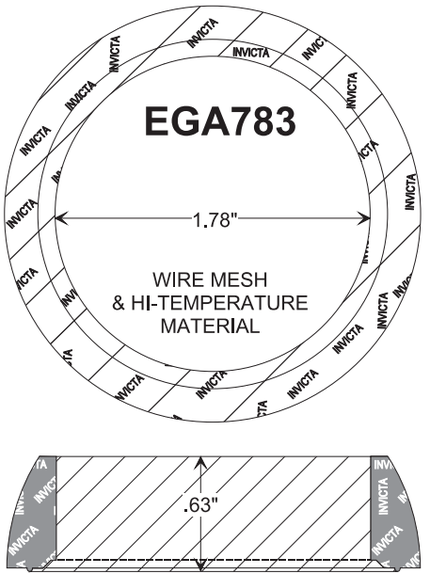

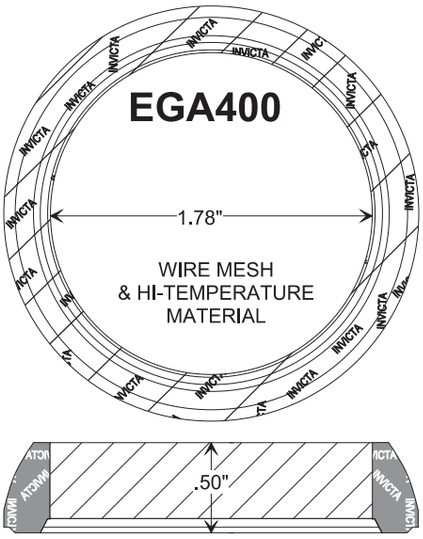

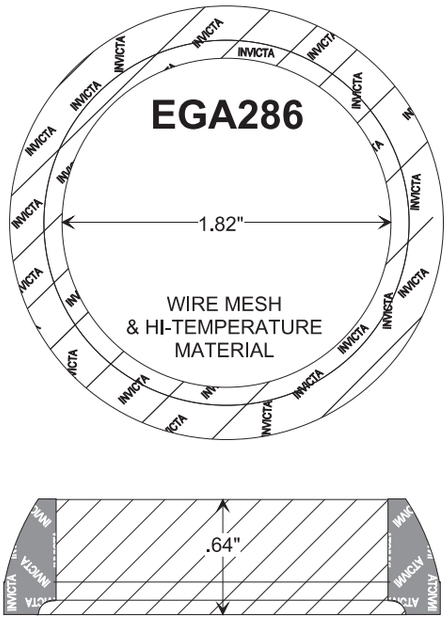

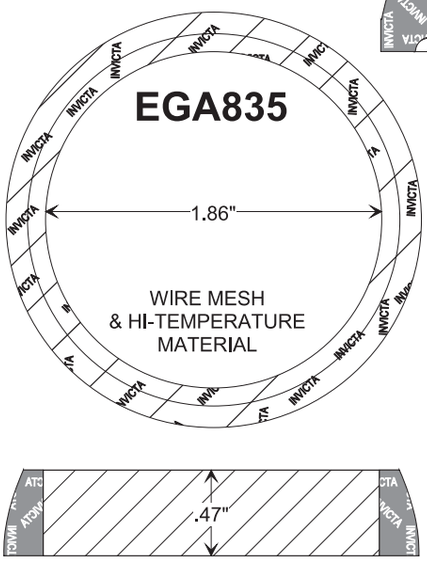

DESIGN STYLE 7

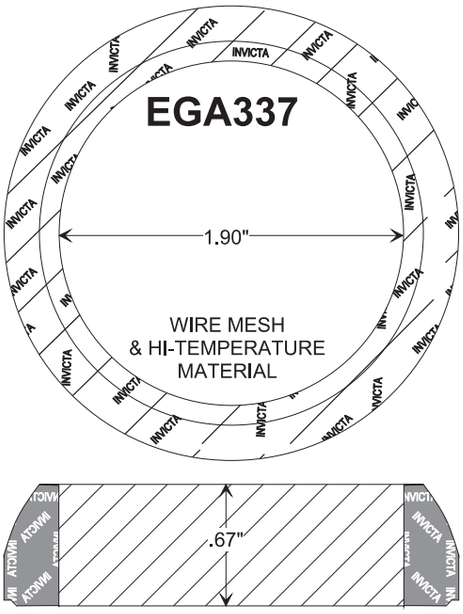

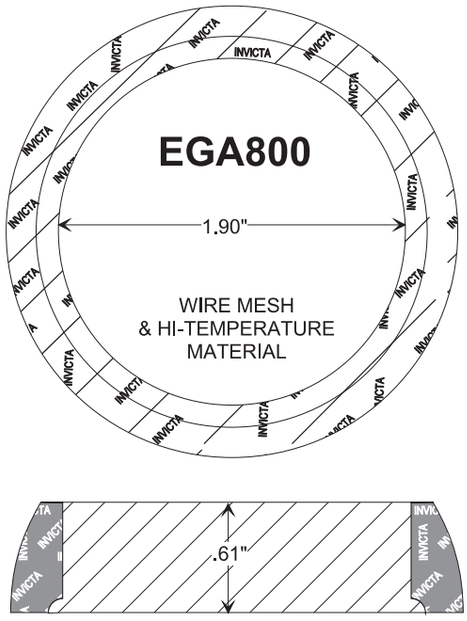

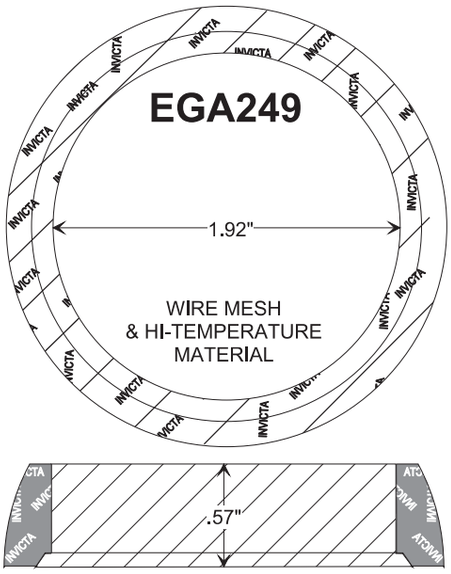

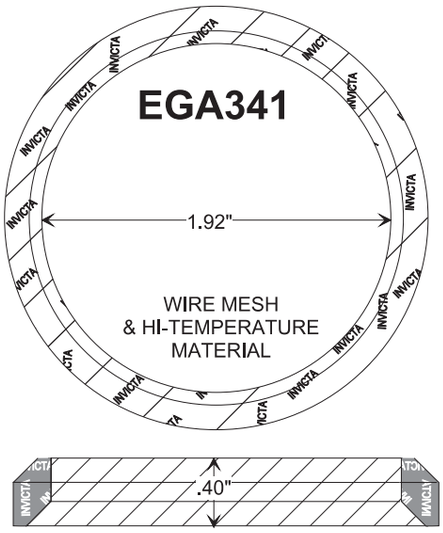

For OEM DESIGN USE EGA341A

DESIGN STYLE 7

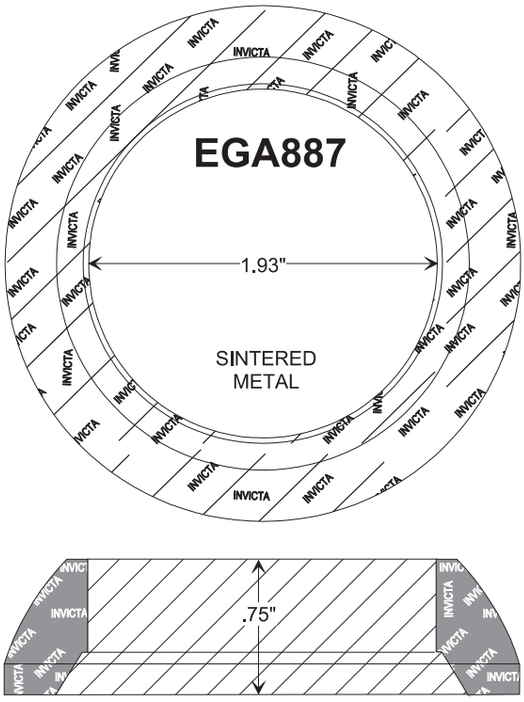

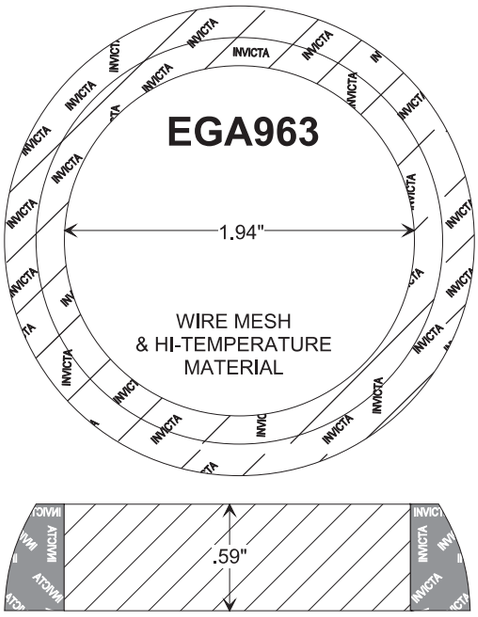

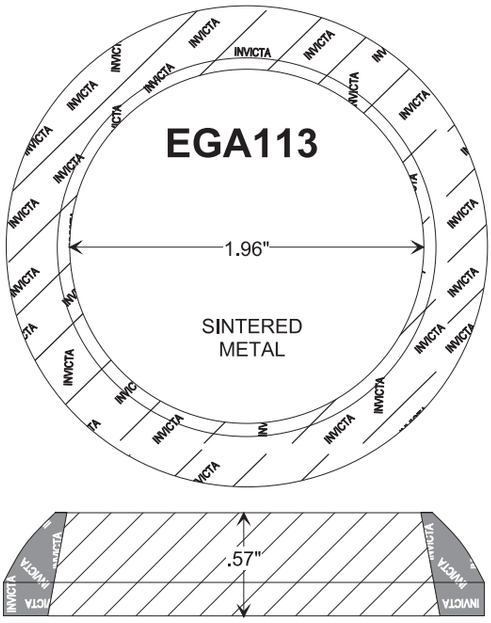

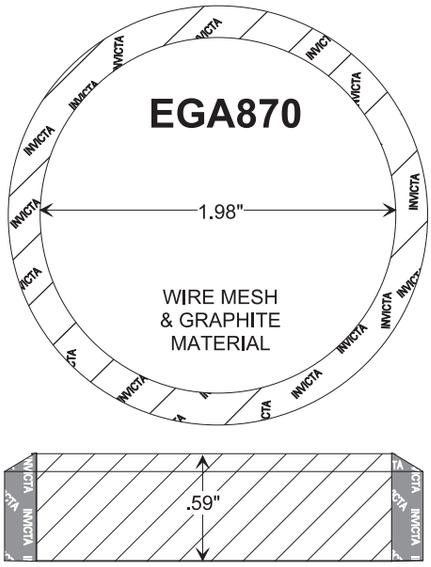

DESIGN STYLE 7

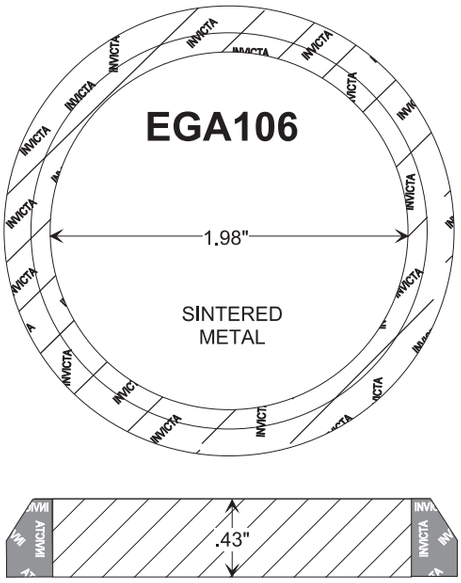

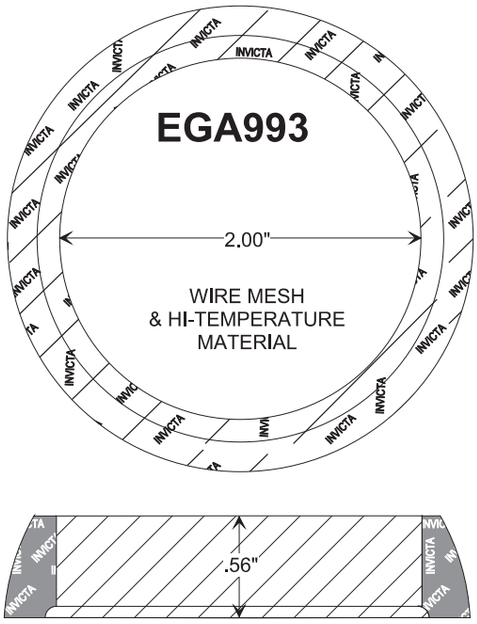

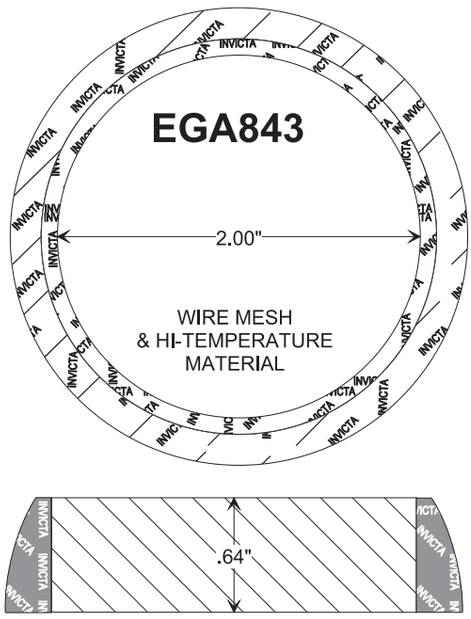

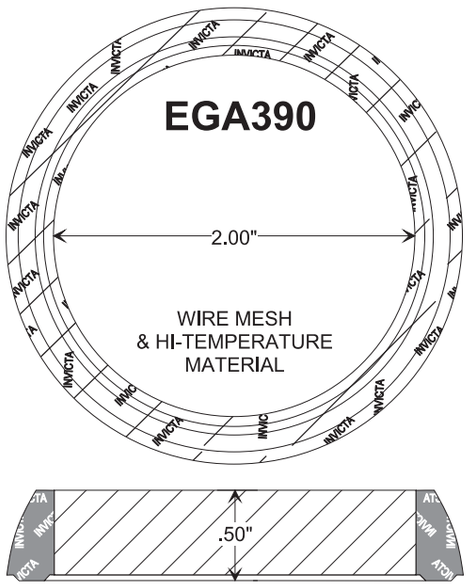

DESIGN STYLE 7

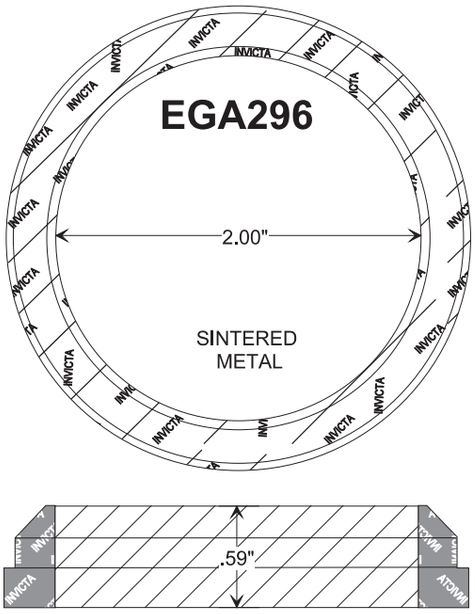

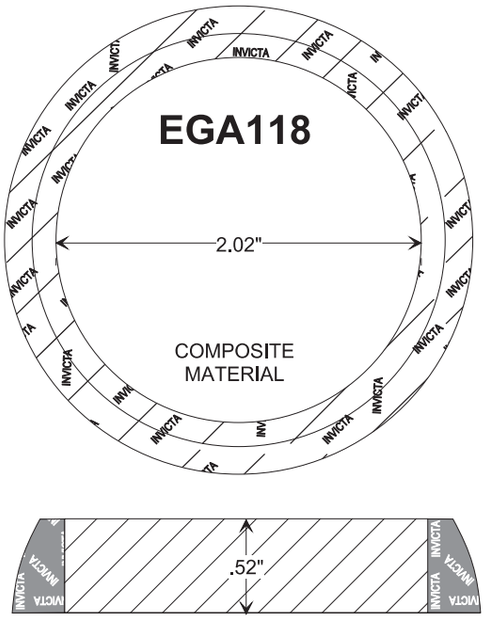

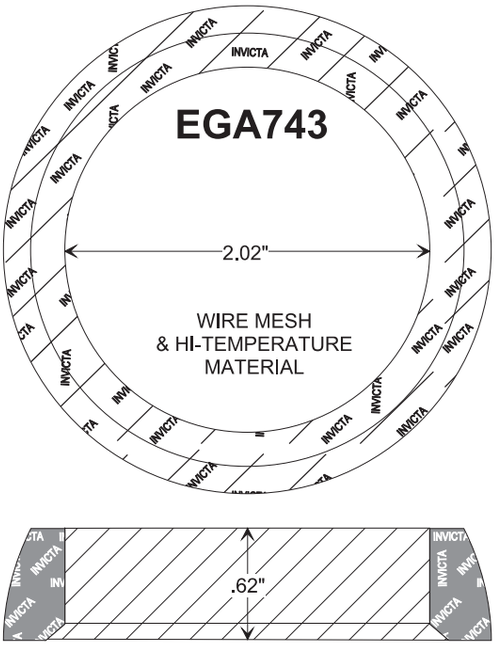

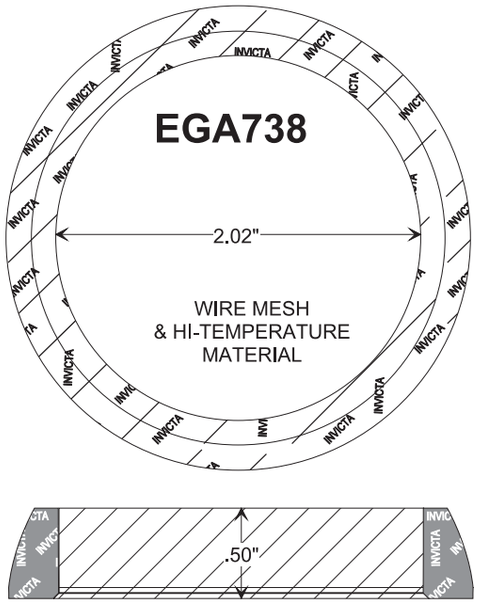

DESIGN STYLE 7

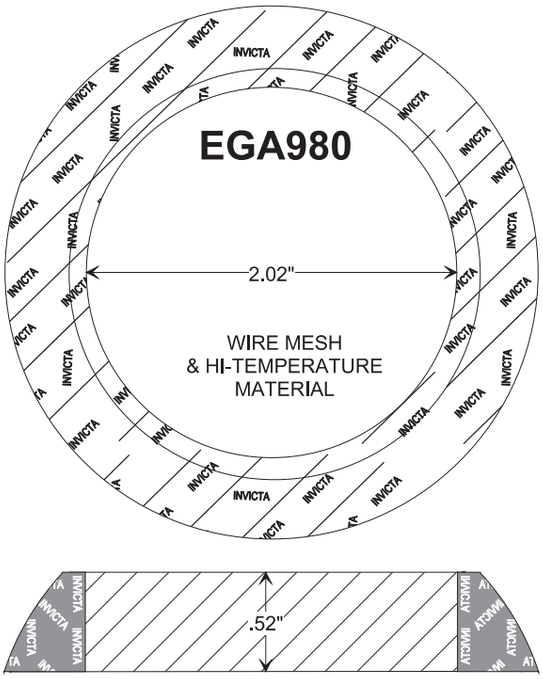

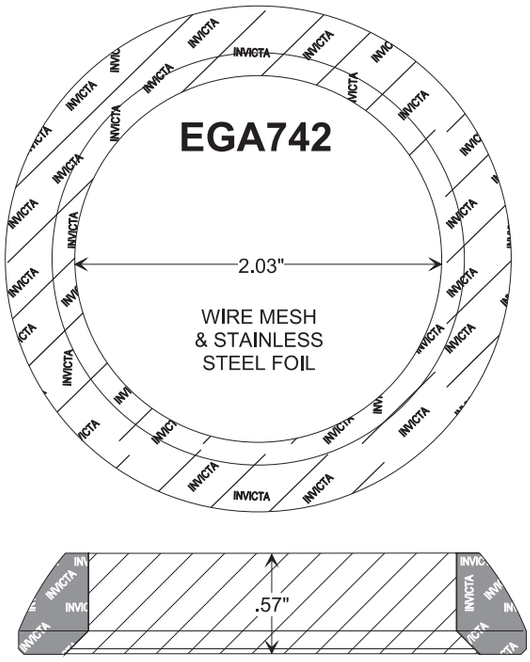

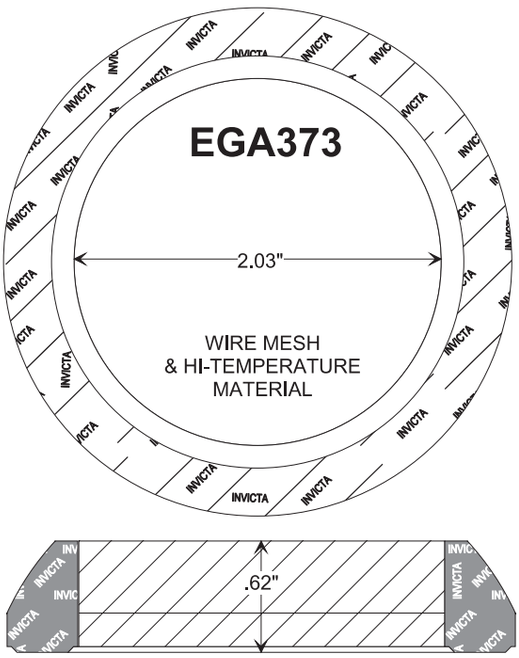

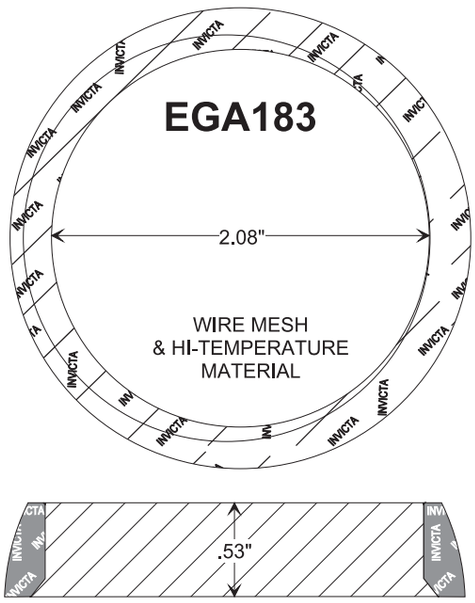

DESIGN STYLE 7

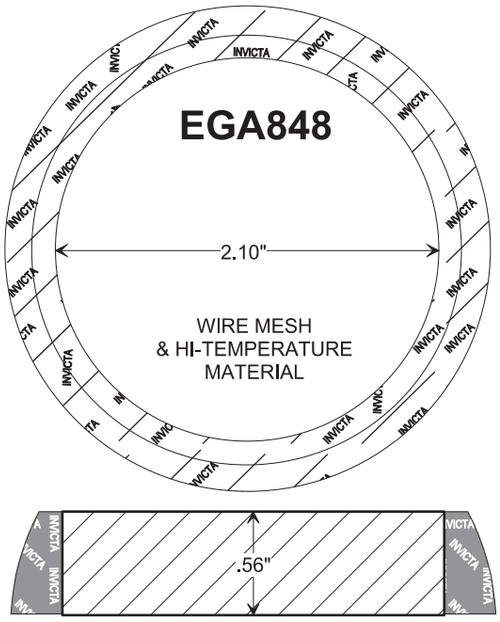

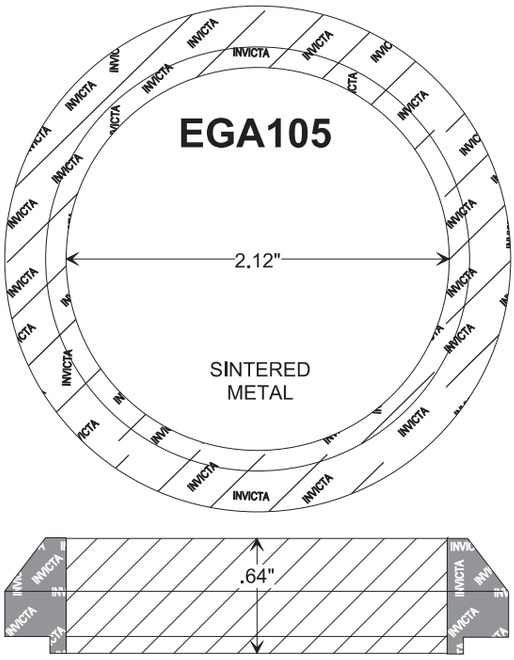

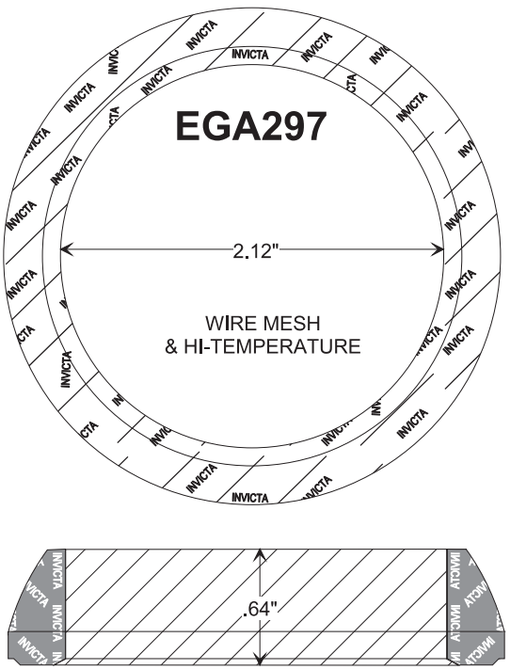

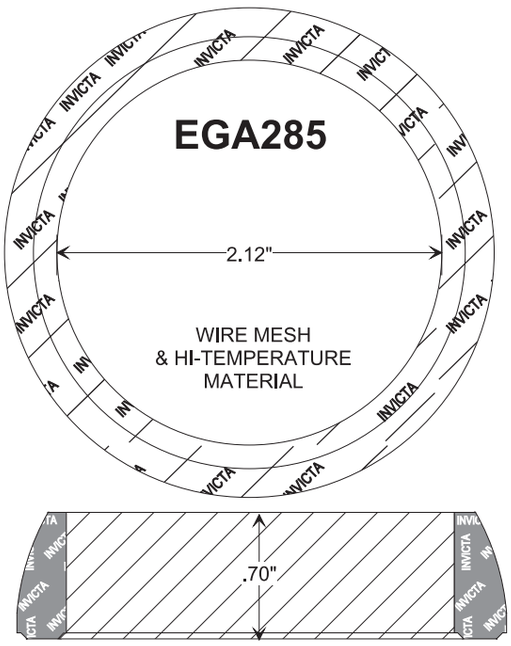

DESIGN STYLE 7

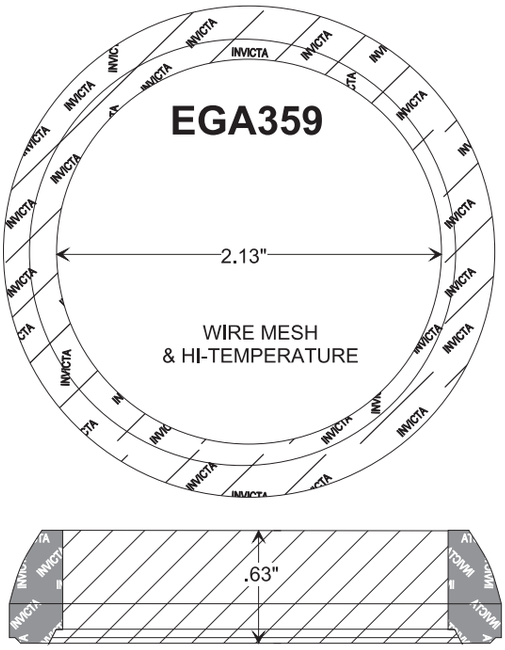

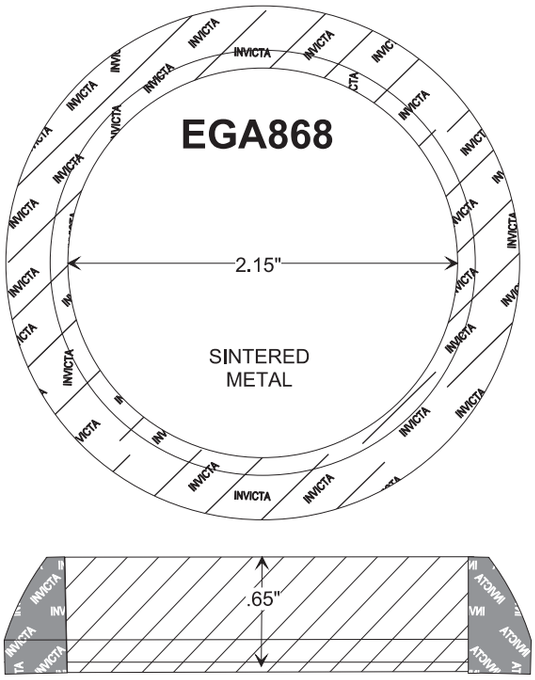

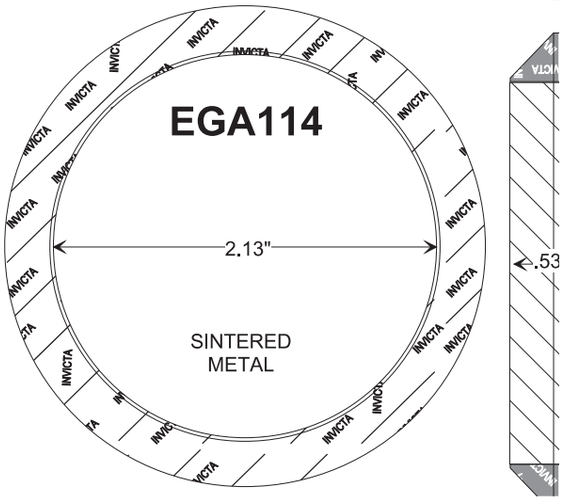

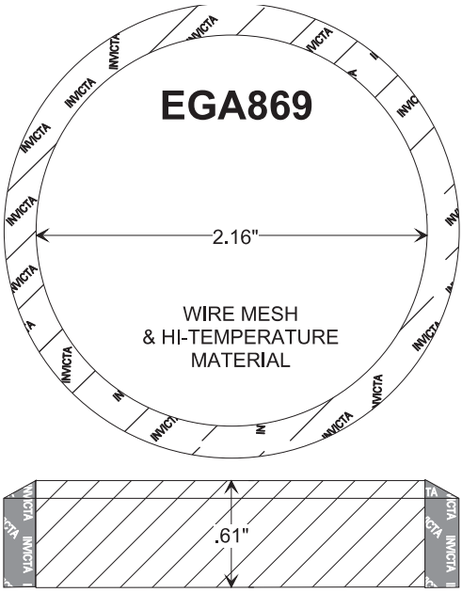

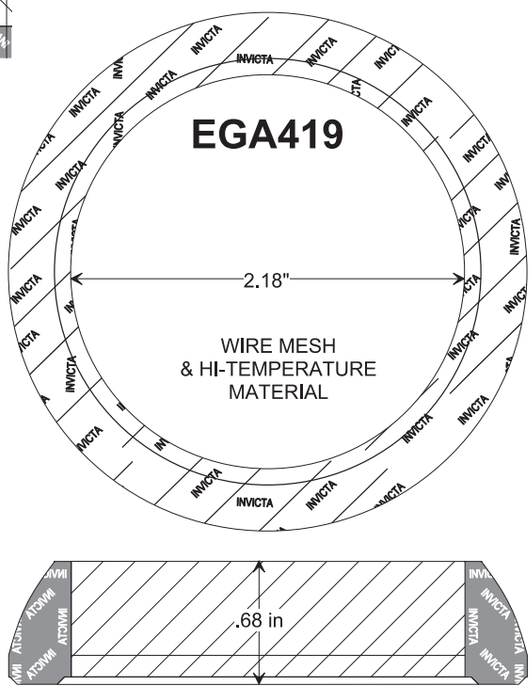

DESIGN STYLE 7

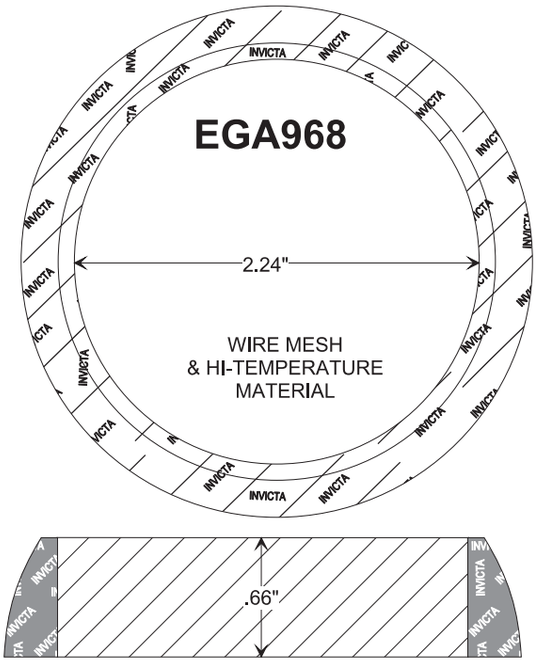

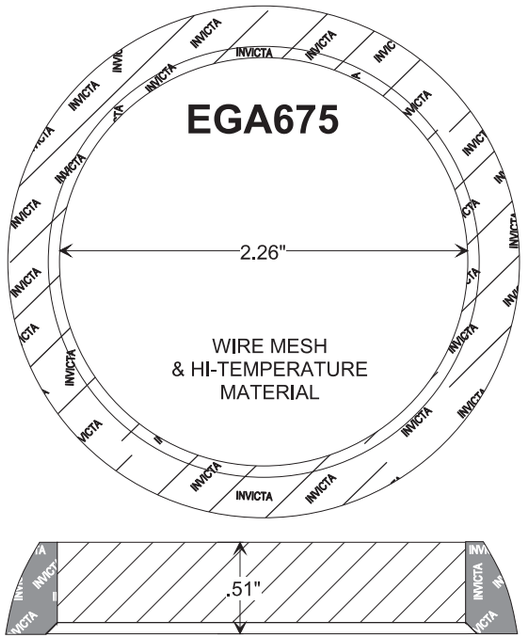

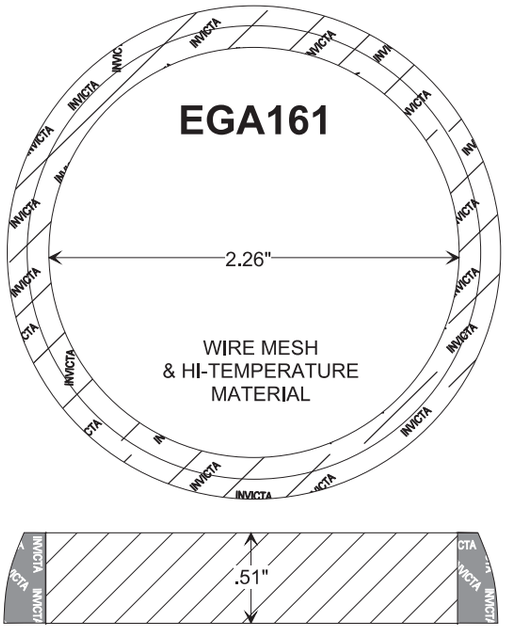

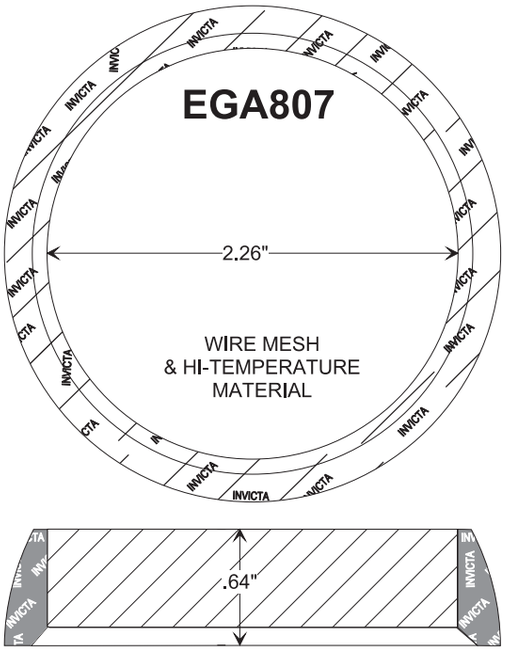

DESIGN STYLE 7

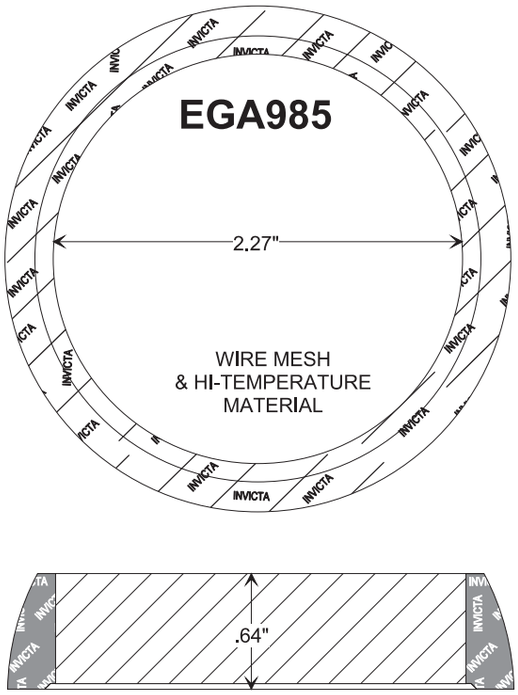

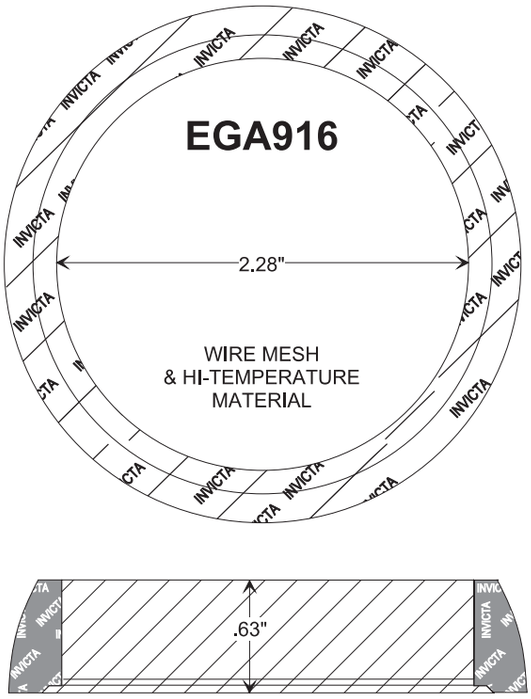

DESIGN STYLE 7

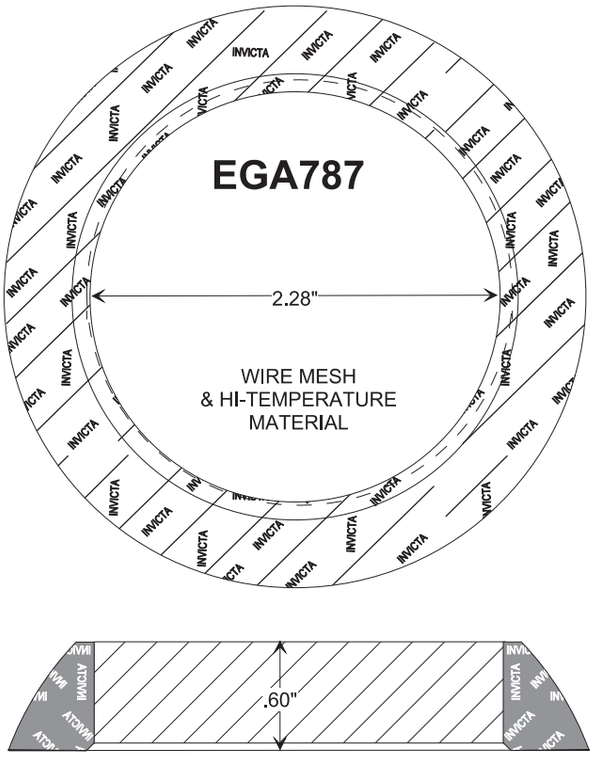

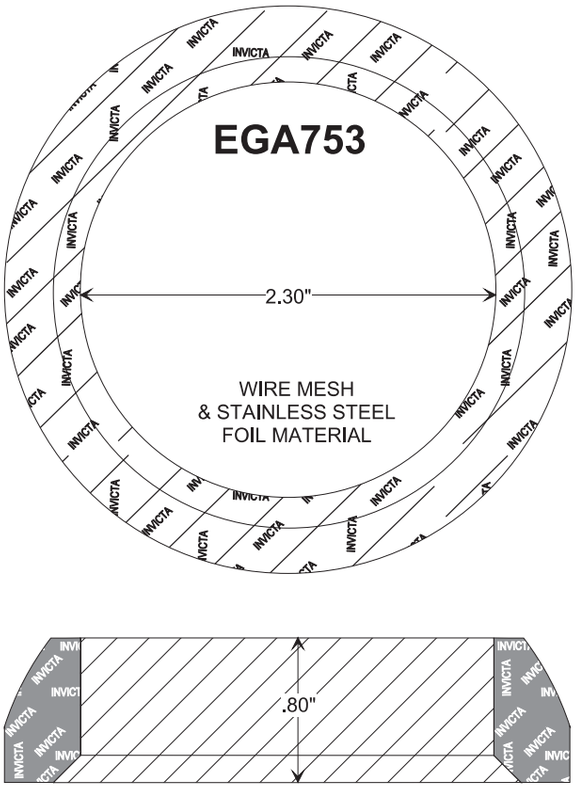

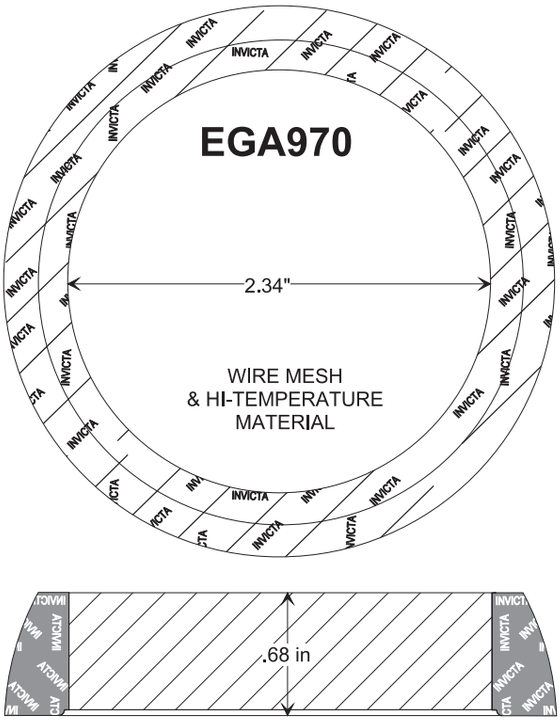

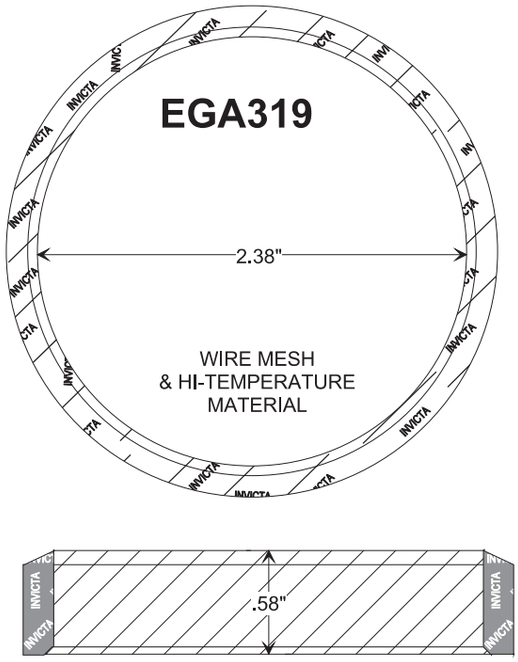

DESIGN STYLE 7

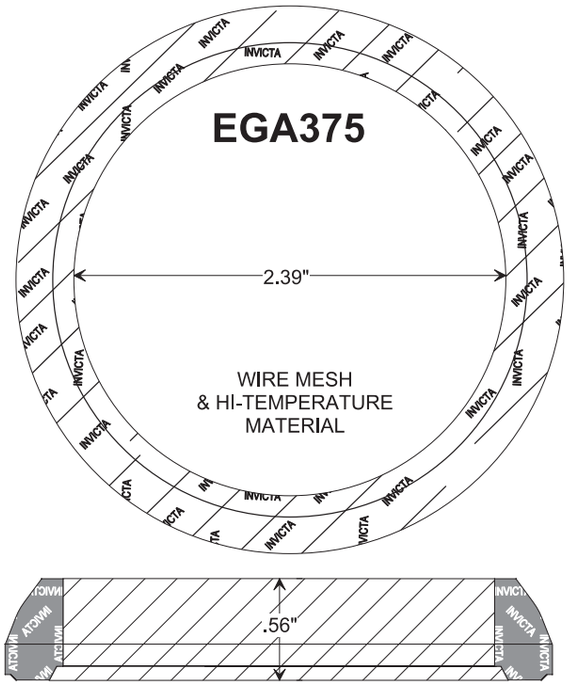

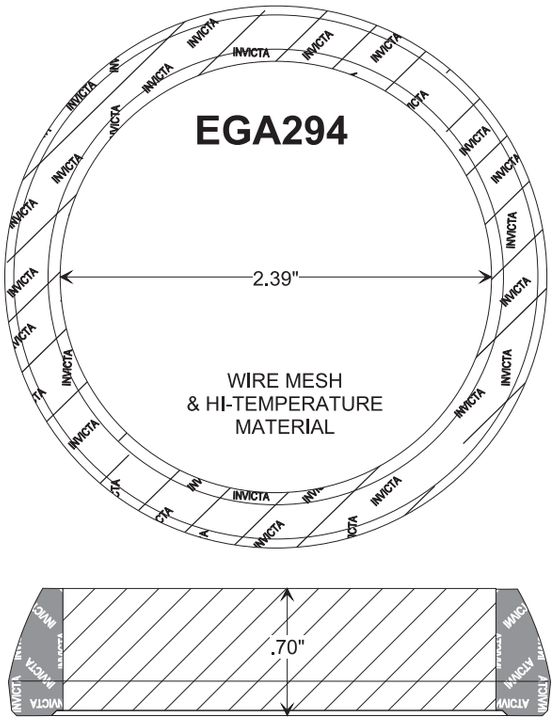

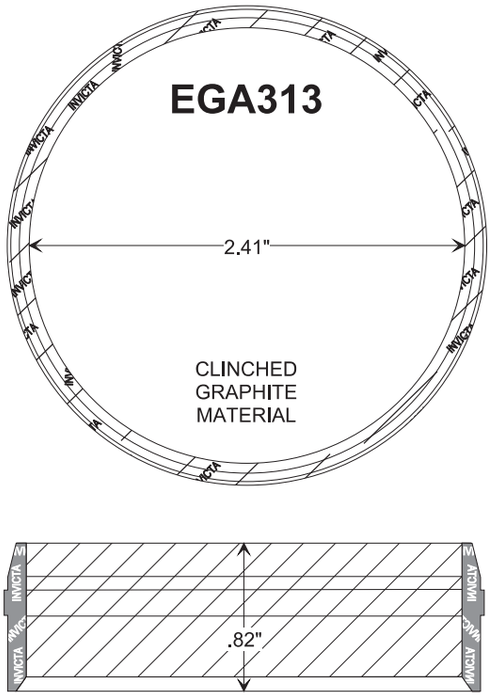

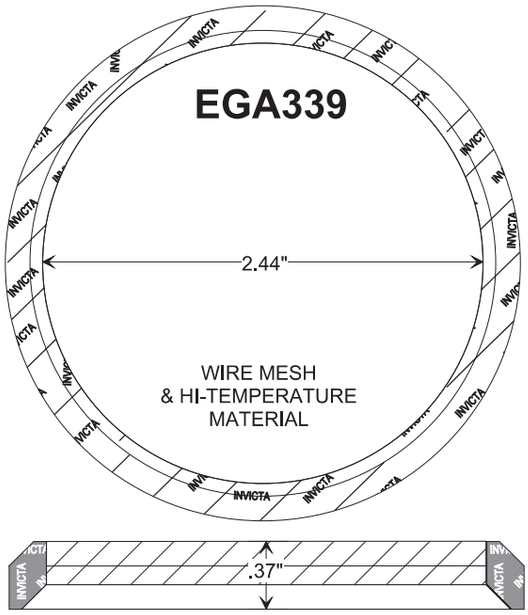

DESIGN STYLE 7

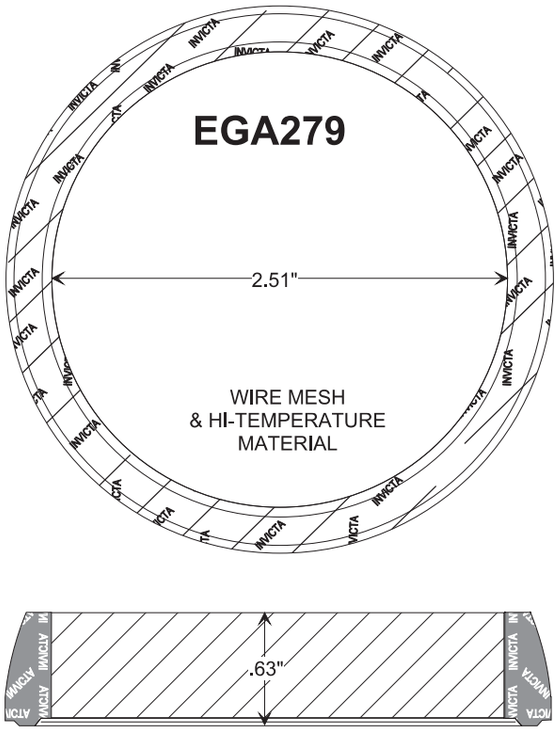

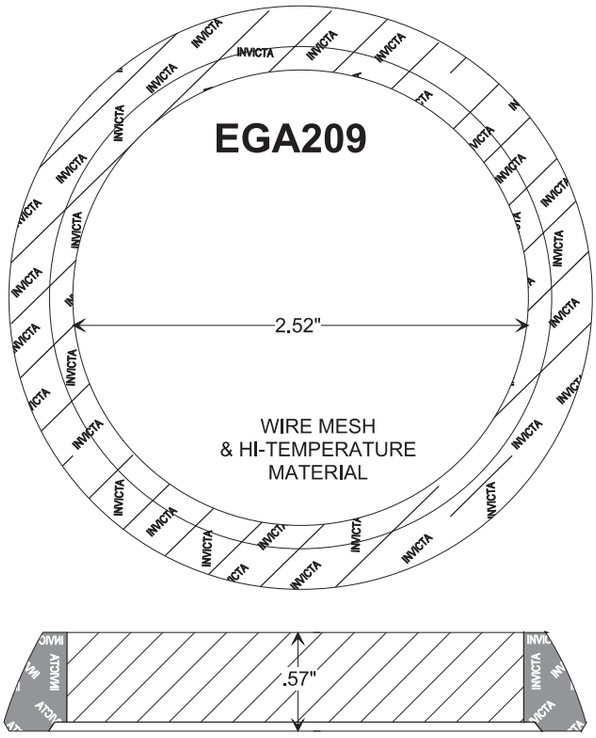

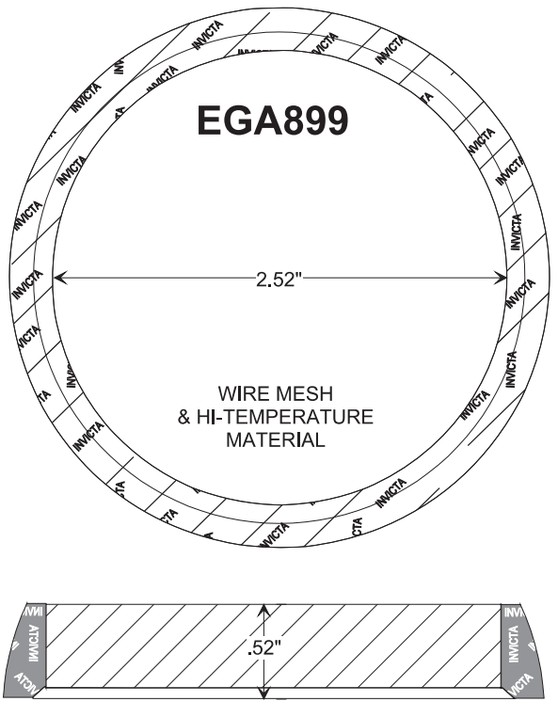

DESIGN STYLE 7

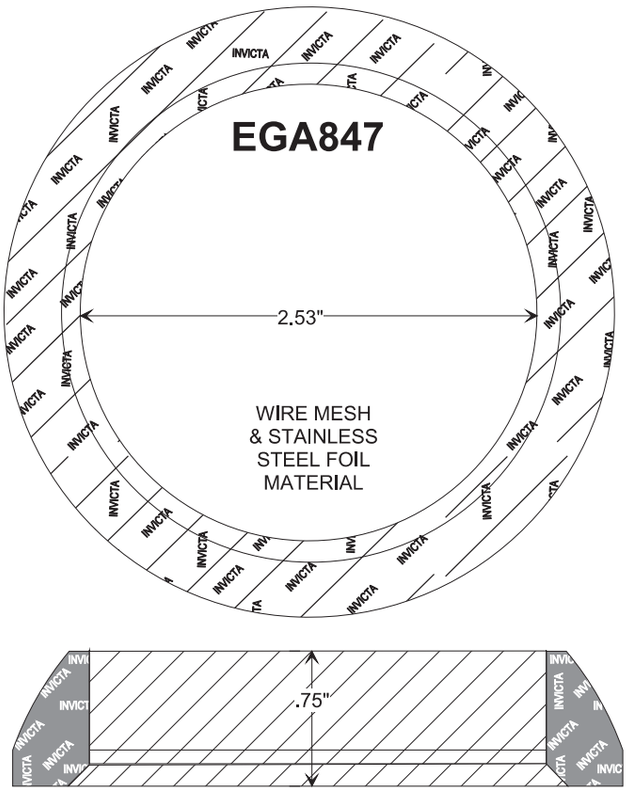

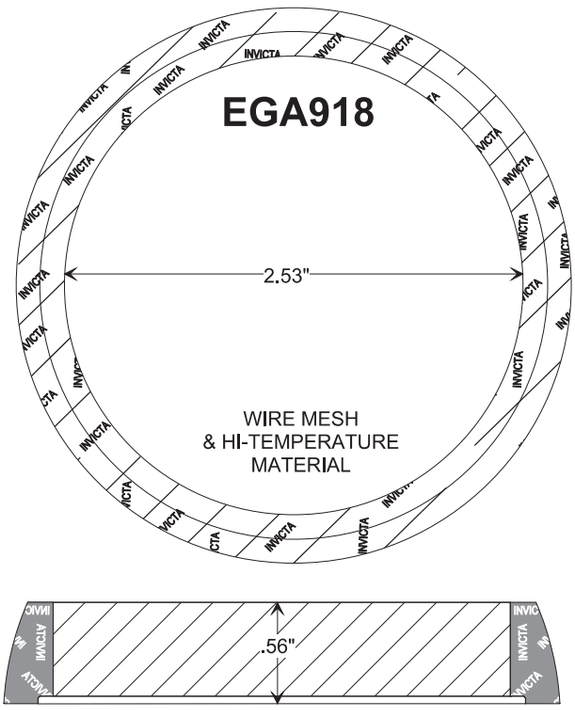

DESIGN STYLE 7

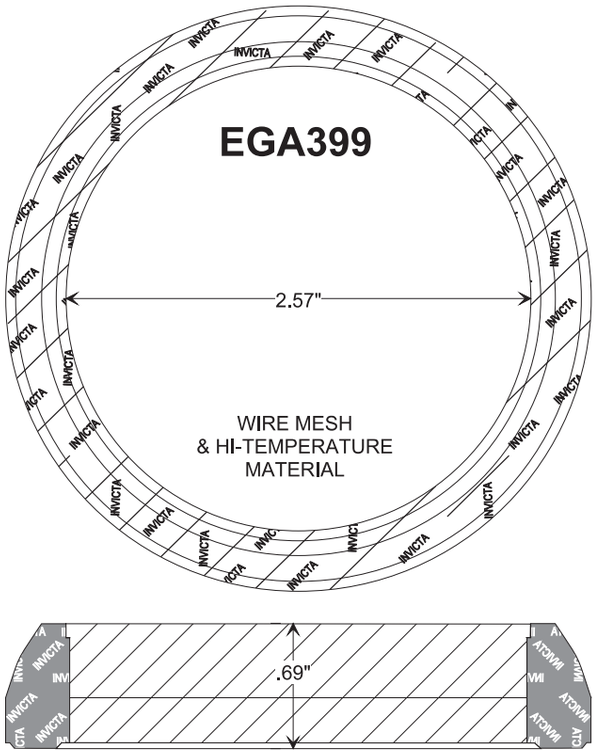

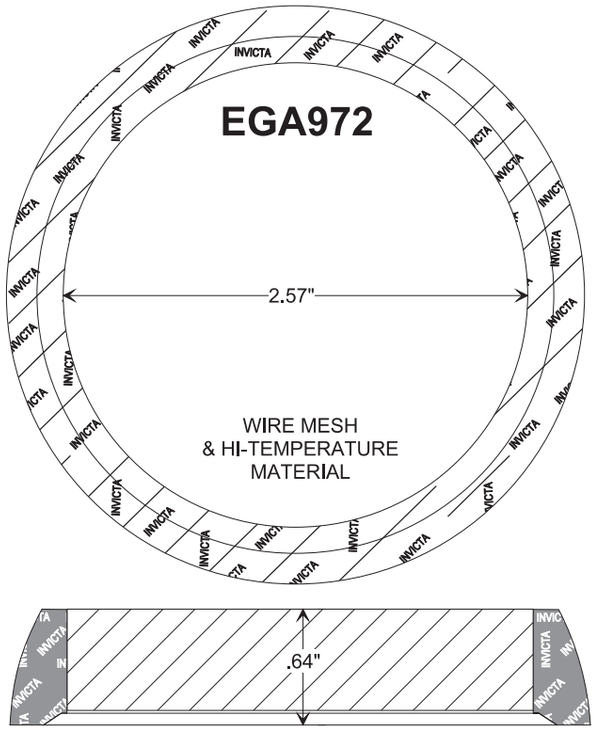

DESIGN STYLE 7

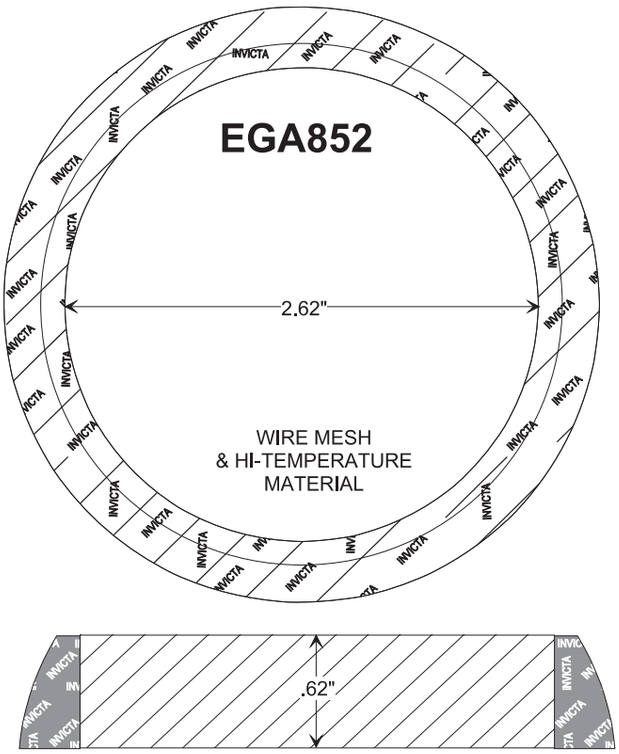

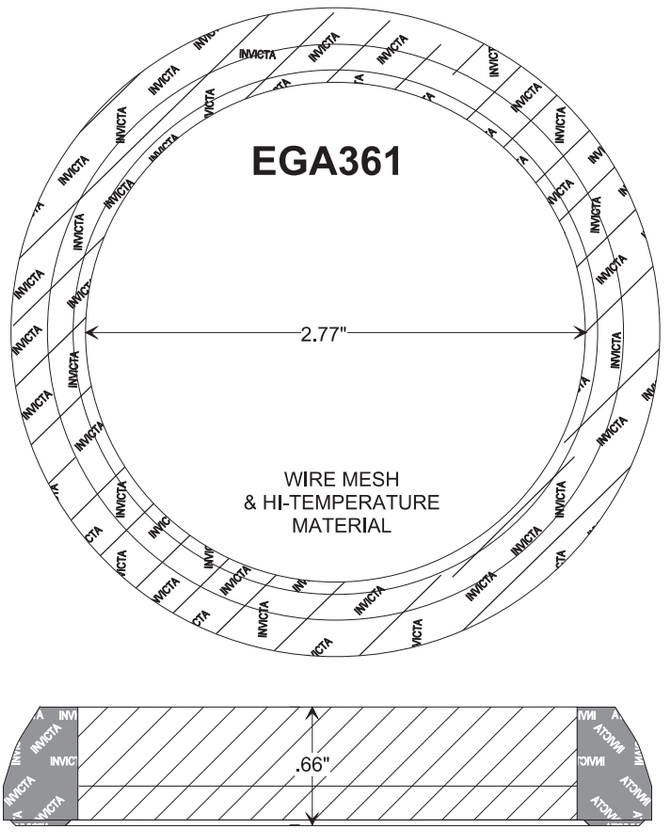

DESIGN STYLE 7

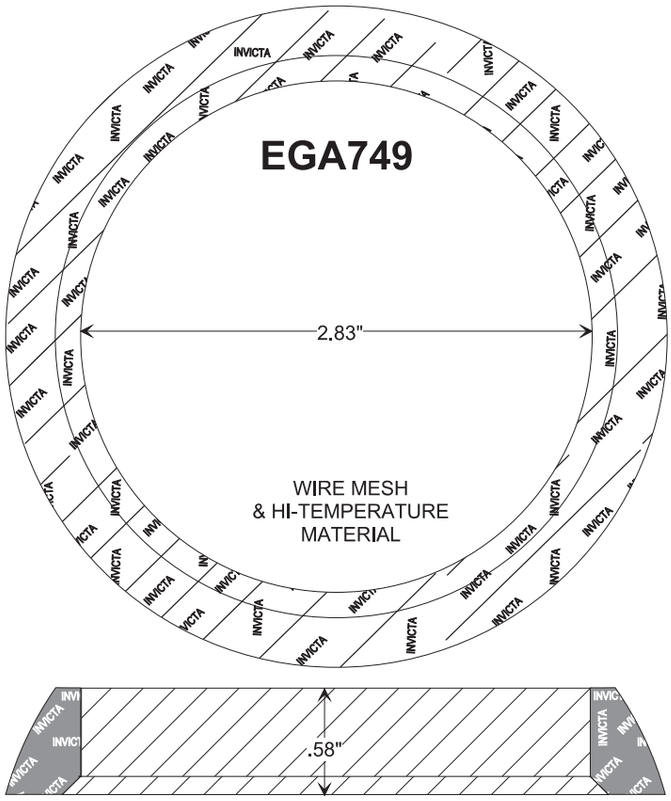

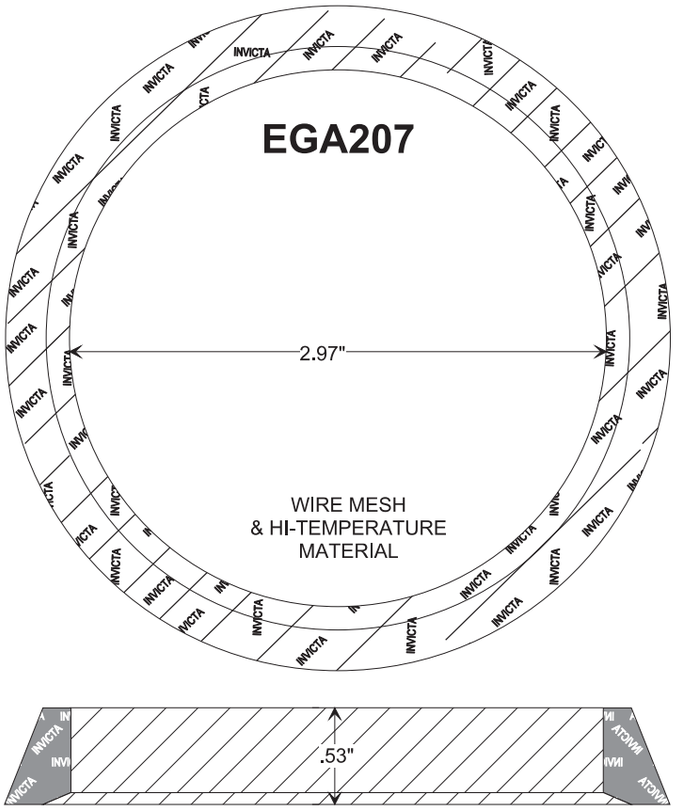

DESIGN STYLE 7

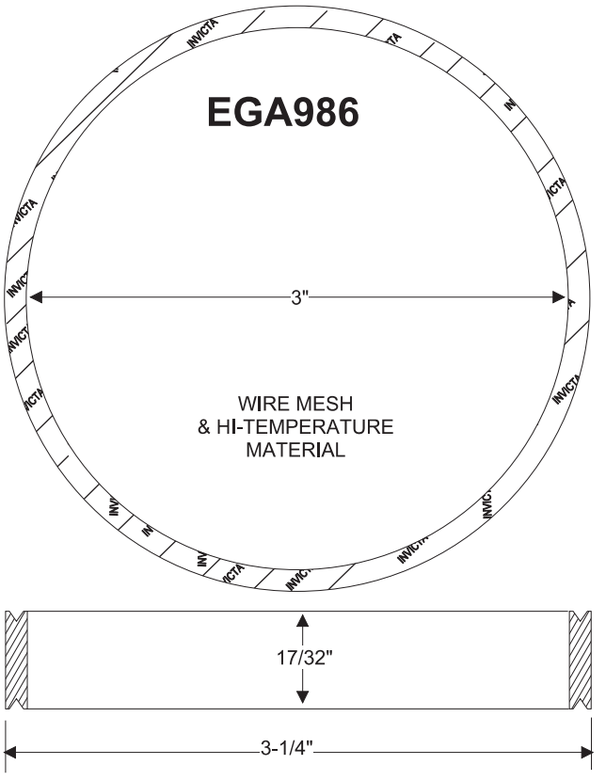

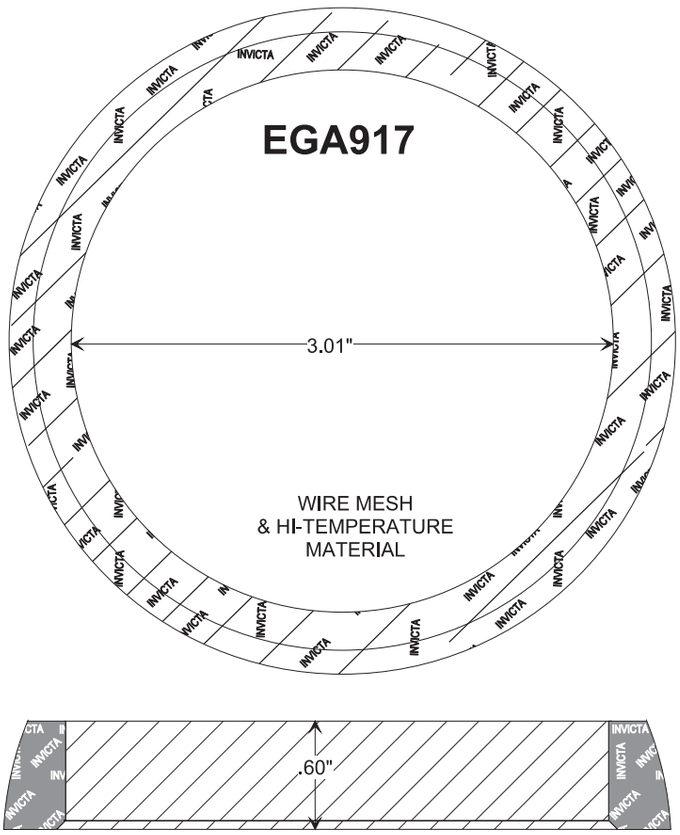

DESIGN STYLE 8

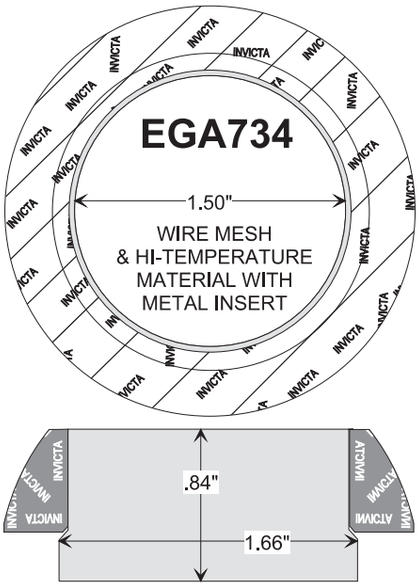

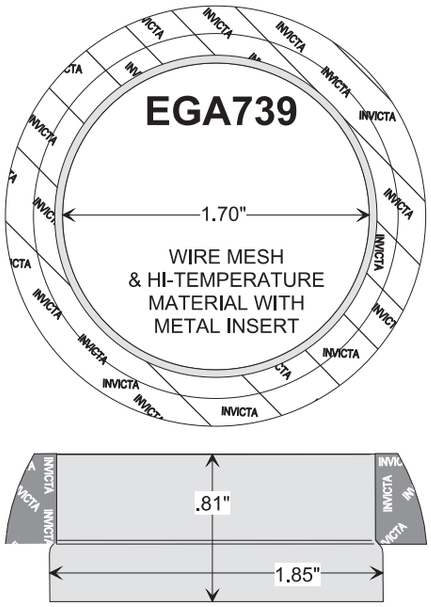

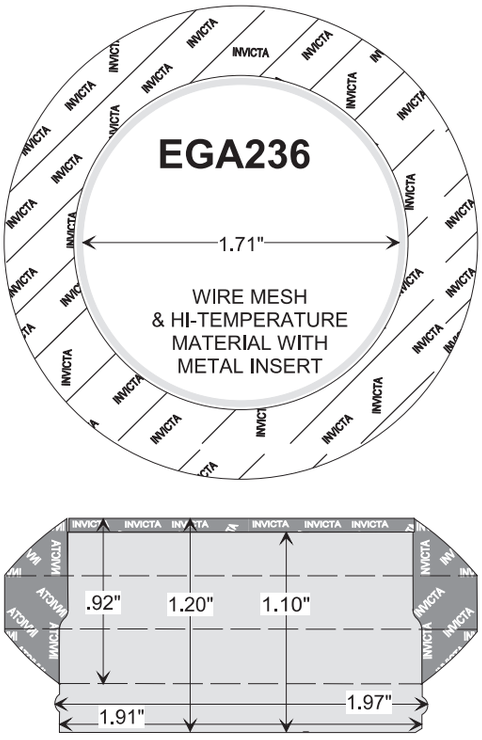

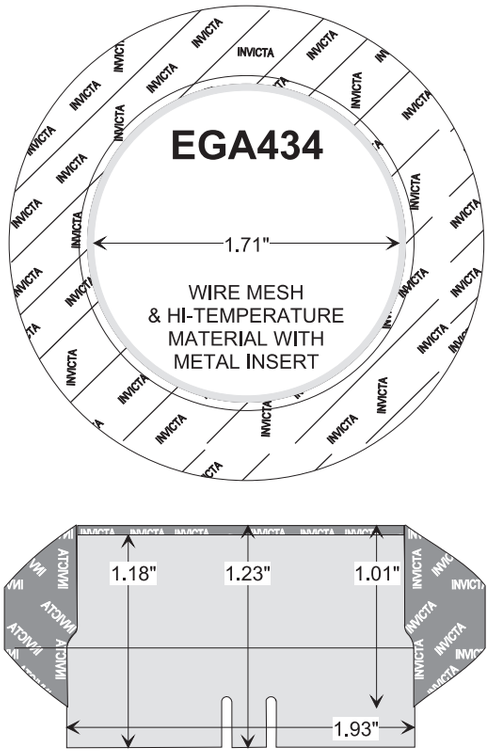

DESIGN STYLE 8

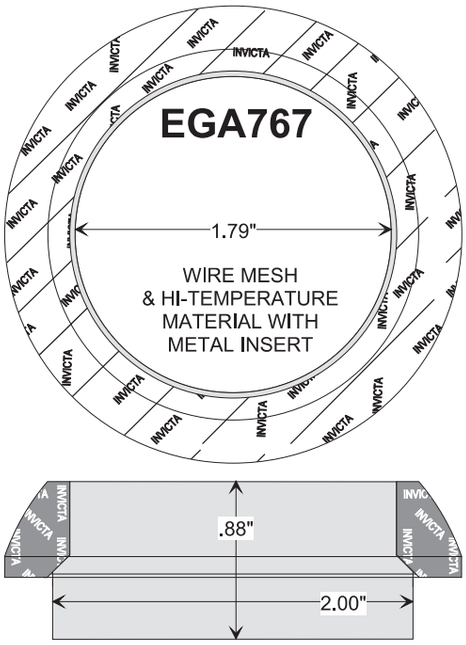

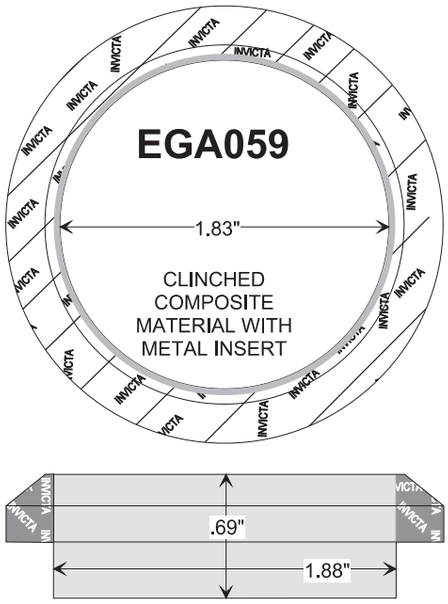

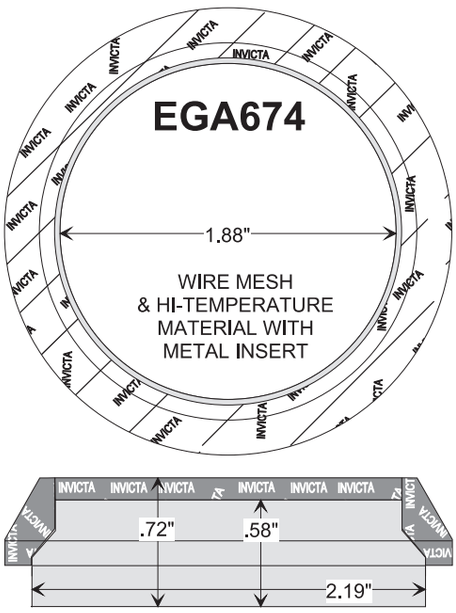

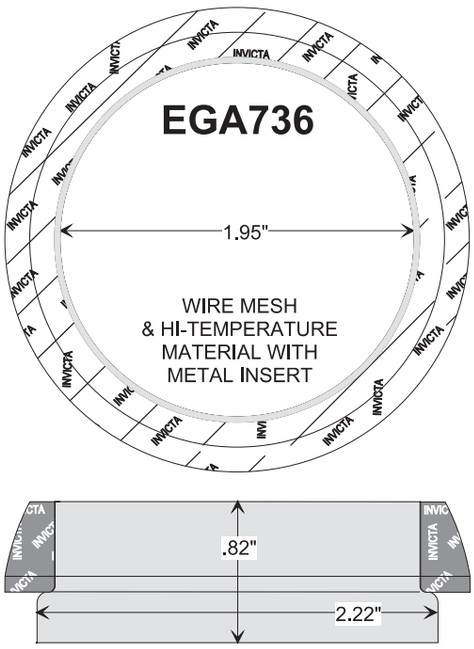

DESIGN STYLE 8

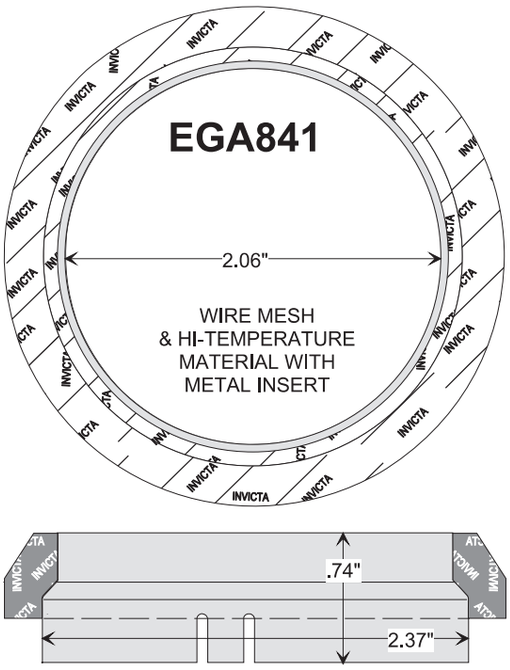

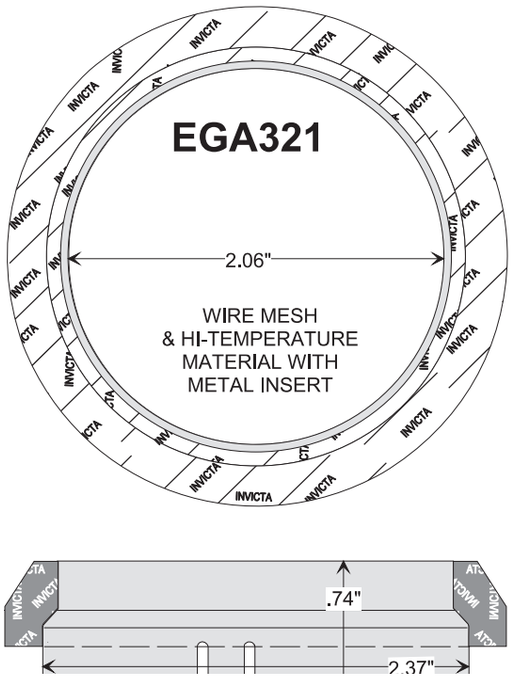

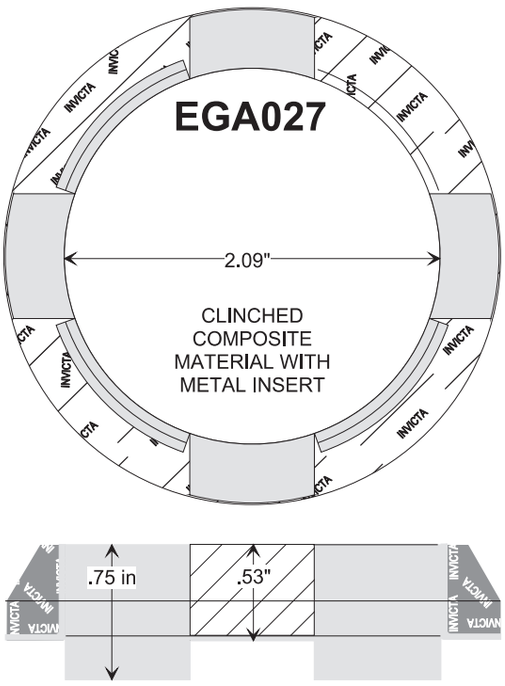

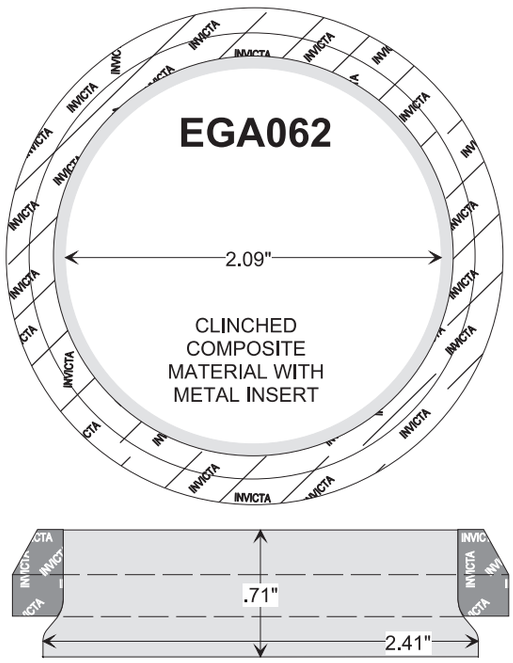

DESIGN STYLE 8

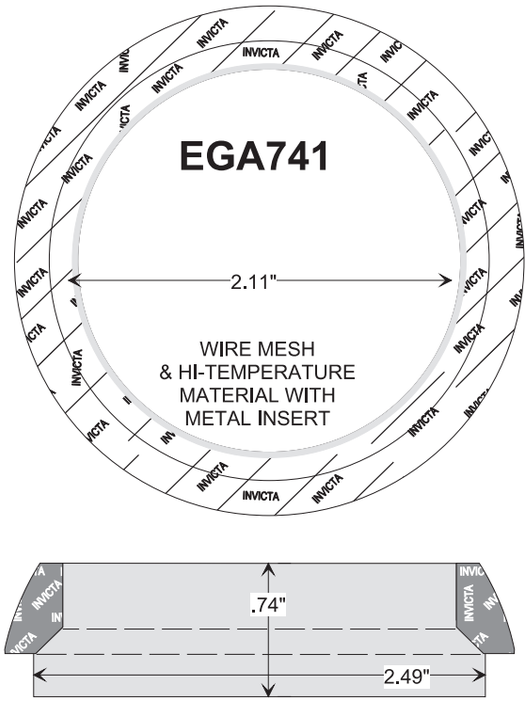

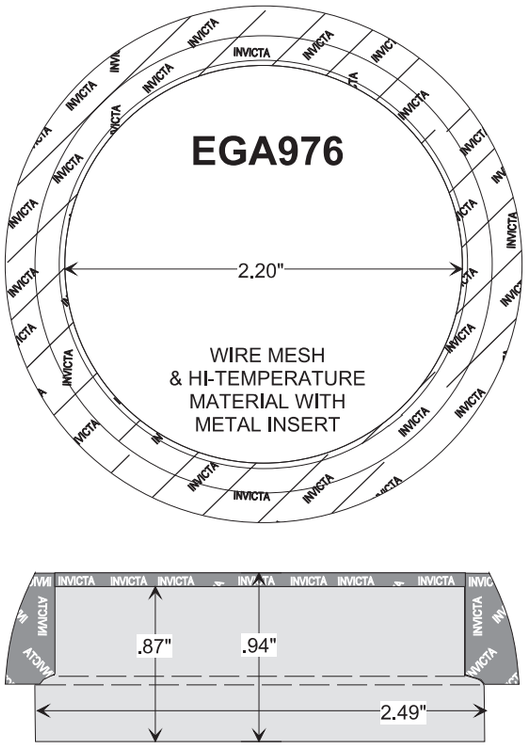

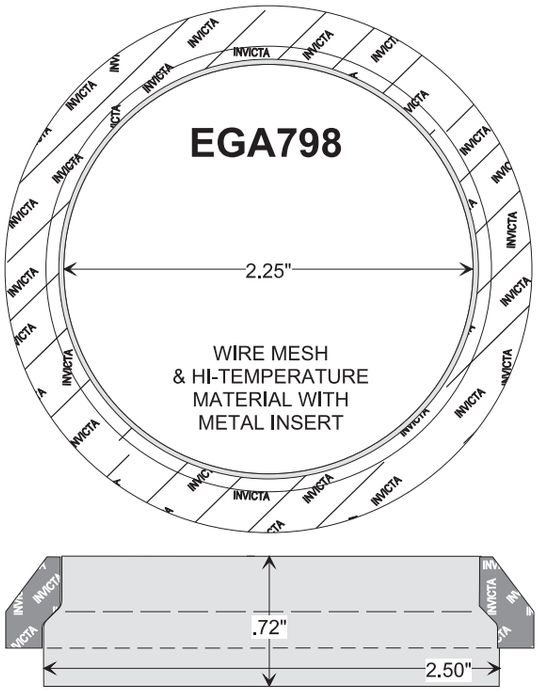

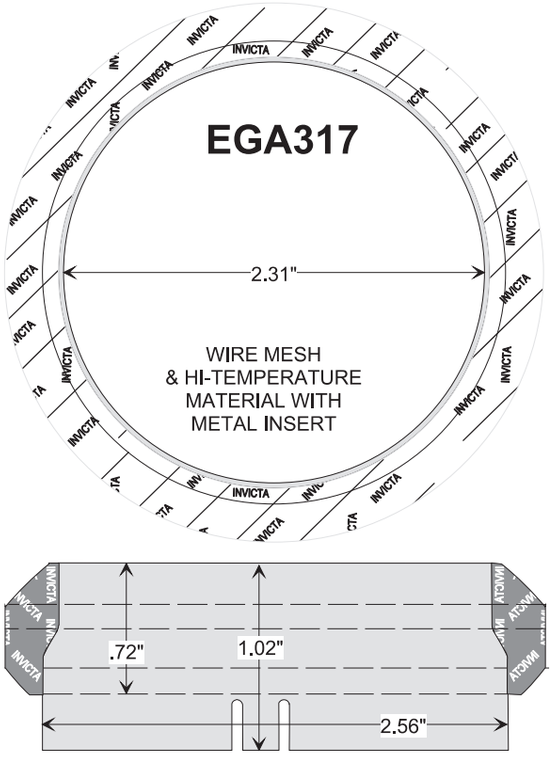

DESIGN STYLE 8

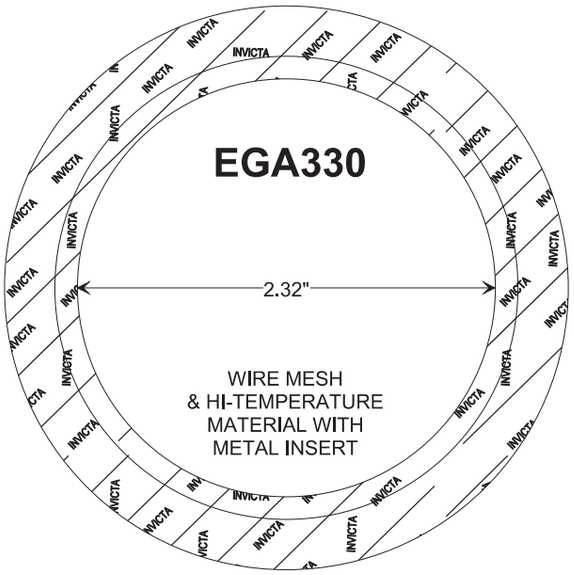

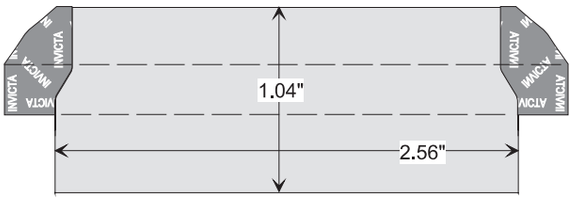

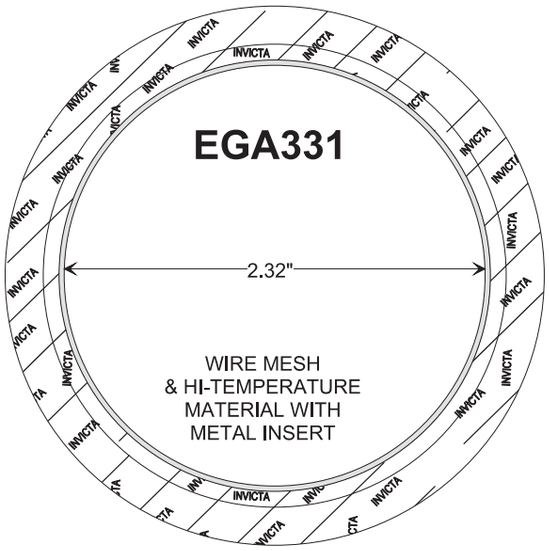

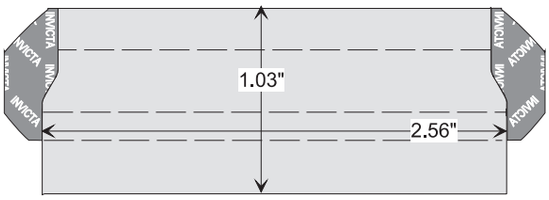

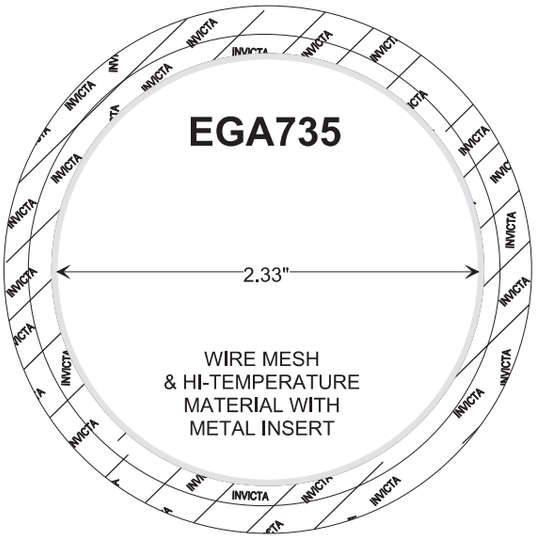

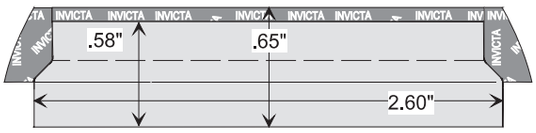

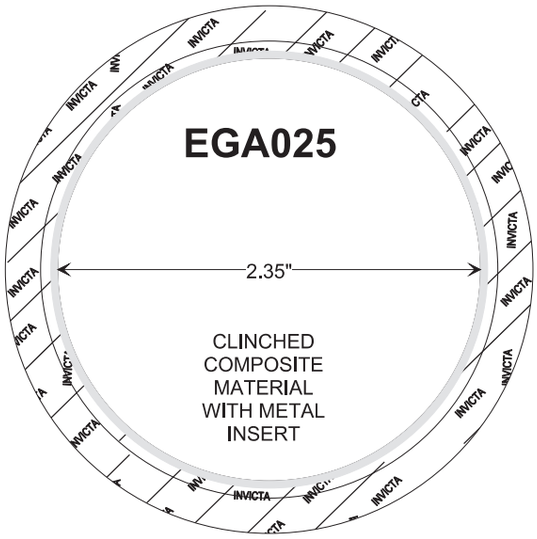

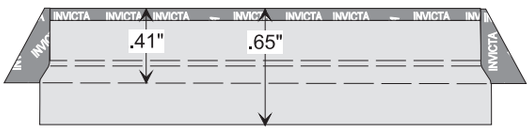

DESIGN STYLE 8

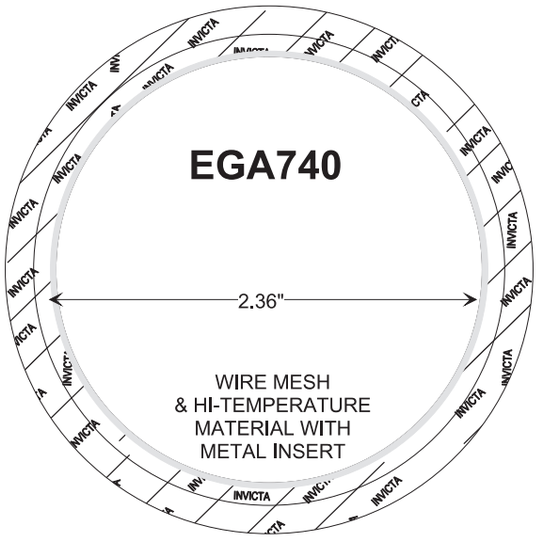

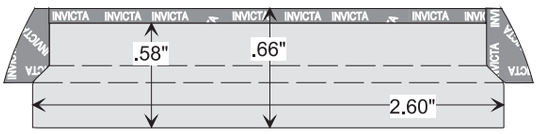

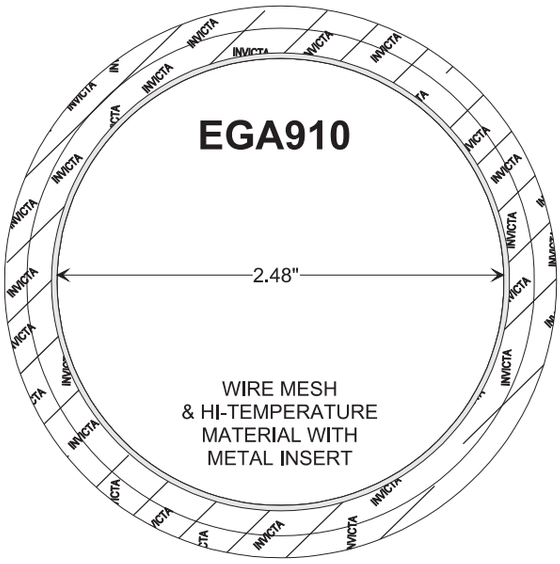

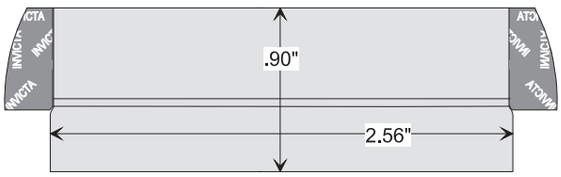

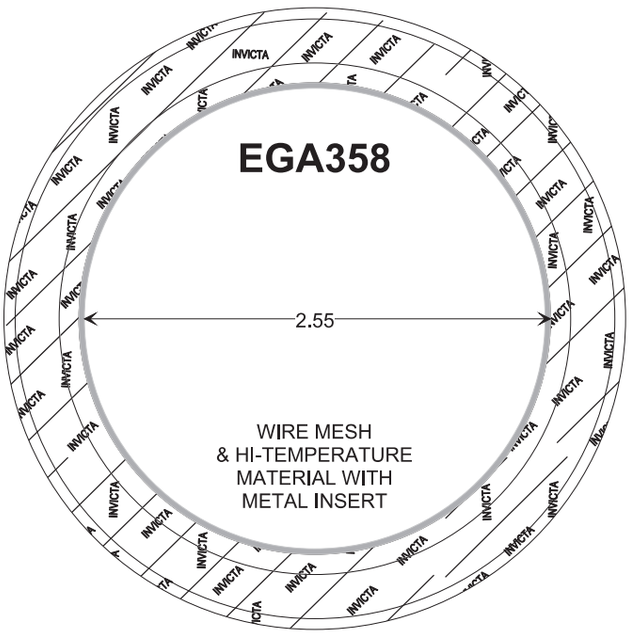

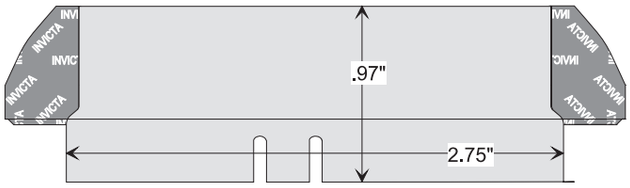

DESIGN STYLE 9

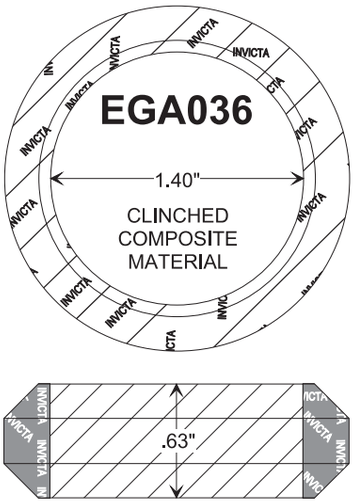

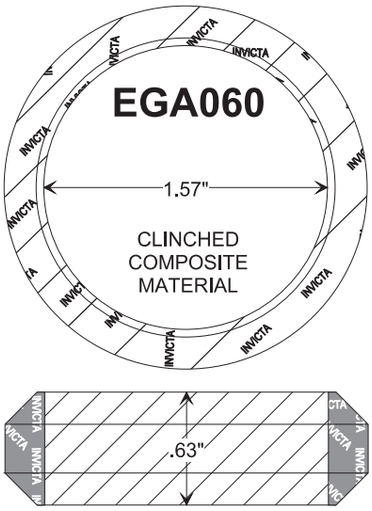

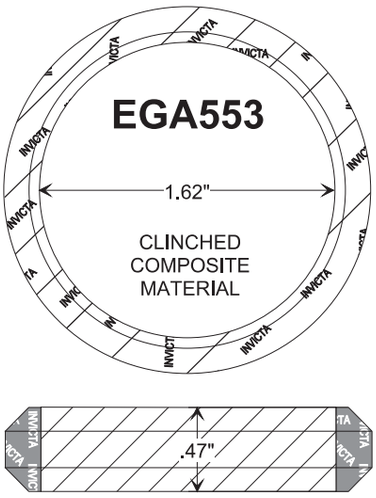

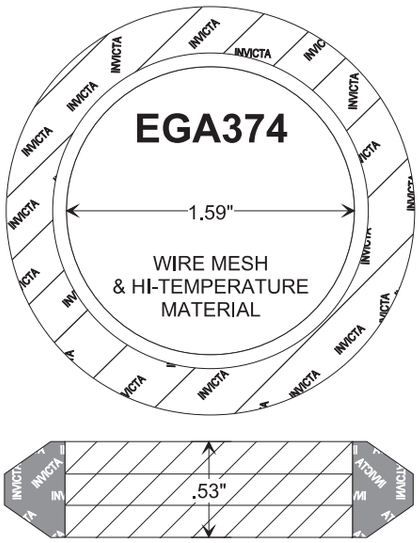

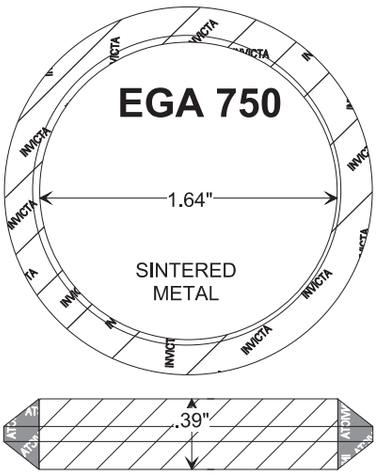

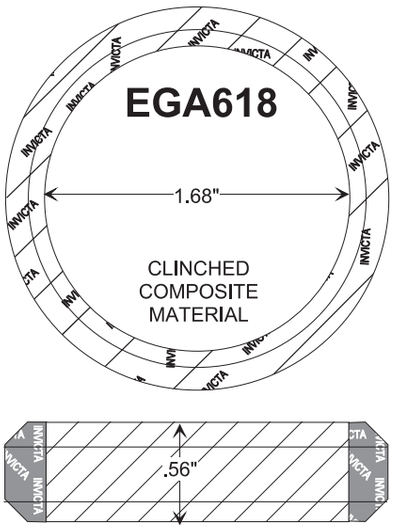

DESIGN STYLE 9

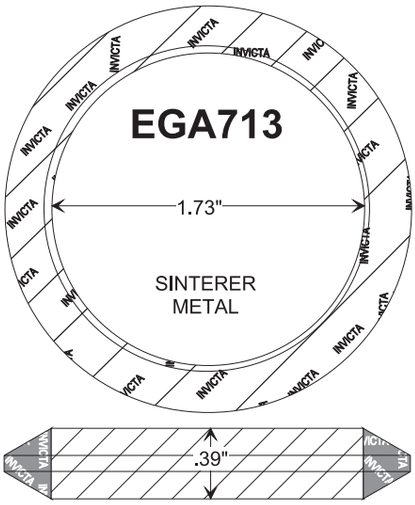

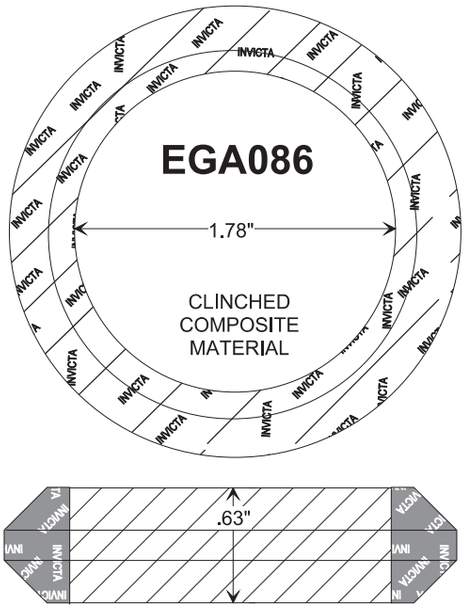

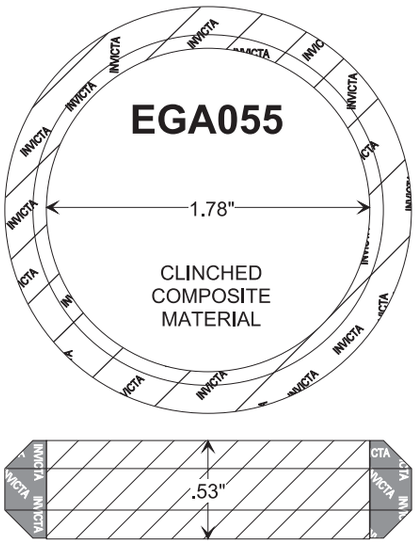

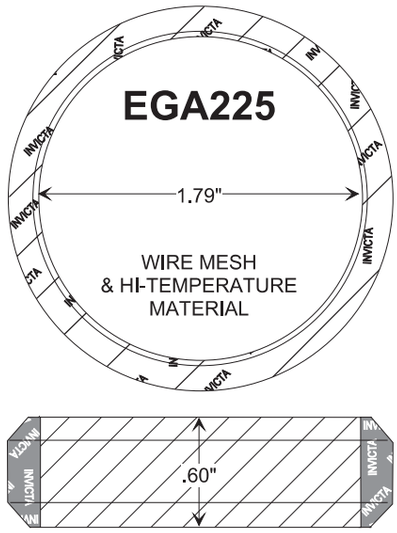

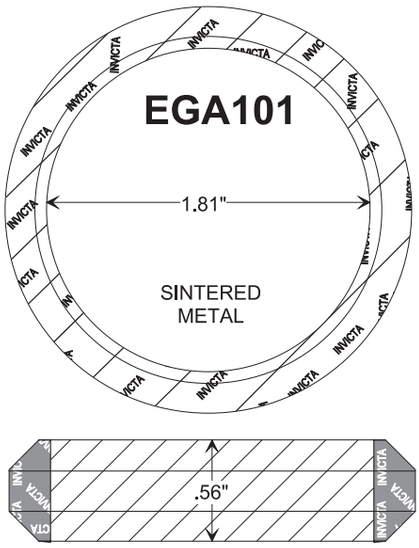

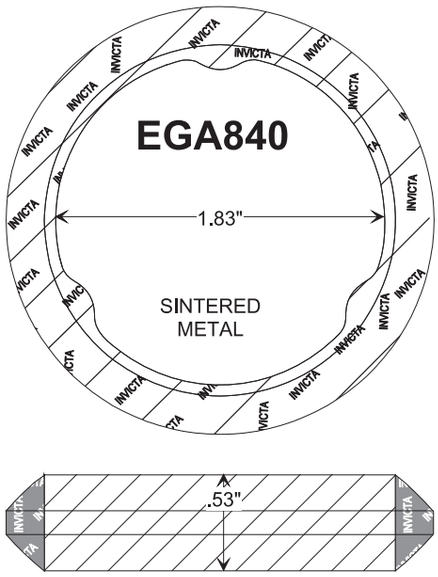

DESIGN STYLE 9

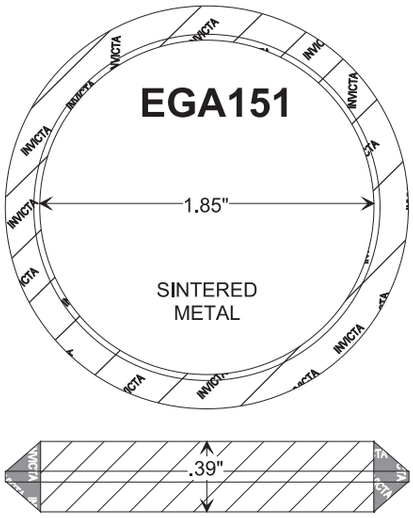

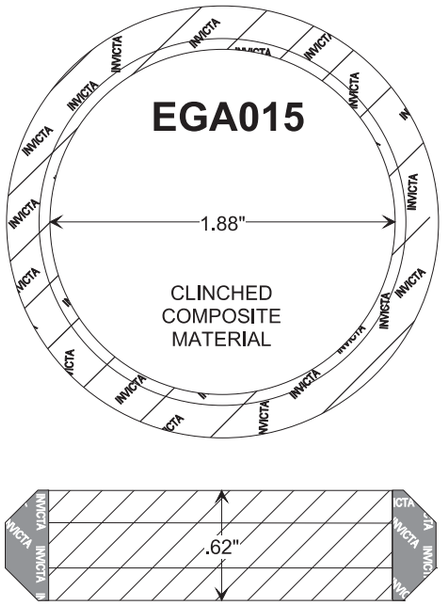

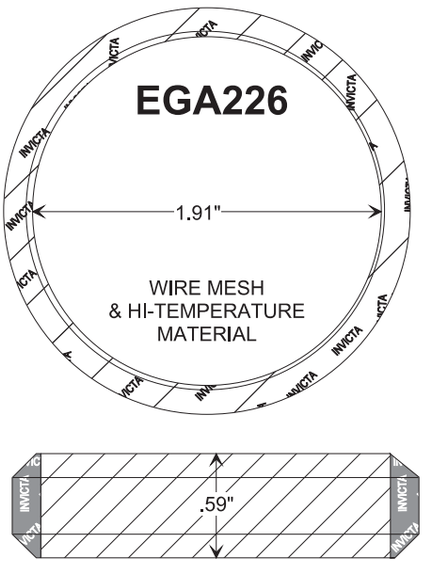

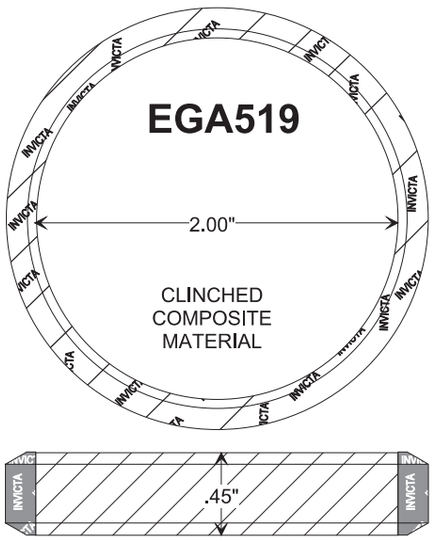

DESIGN STYLE 9

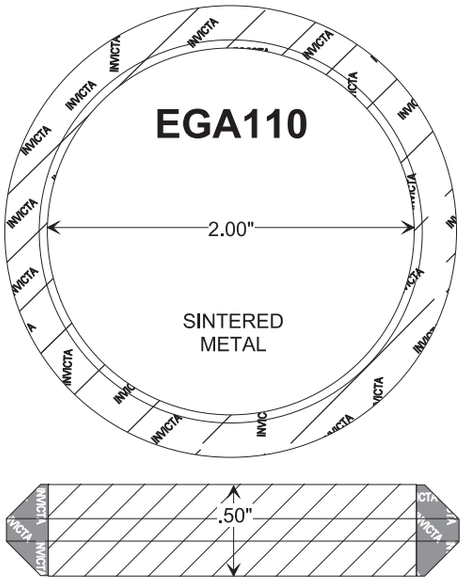

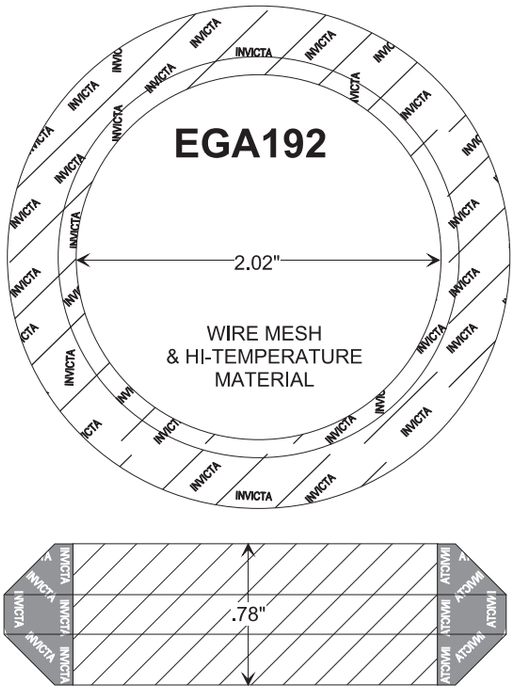

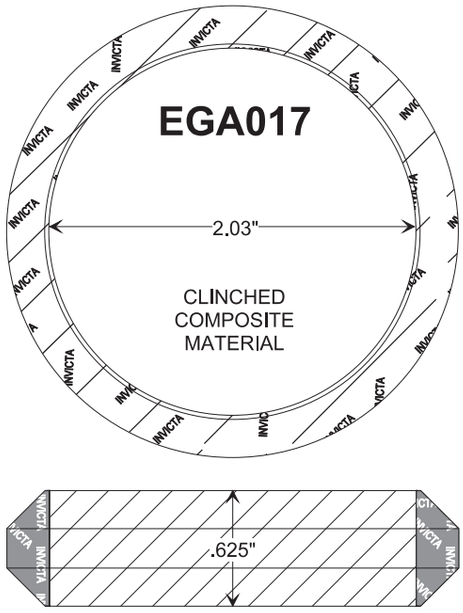

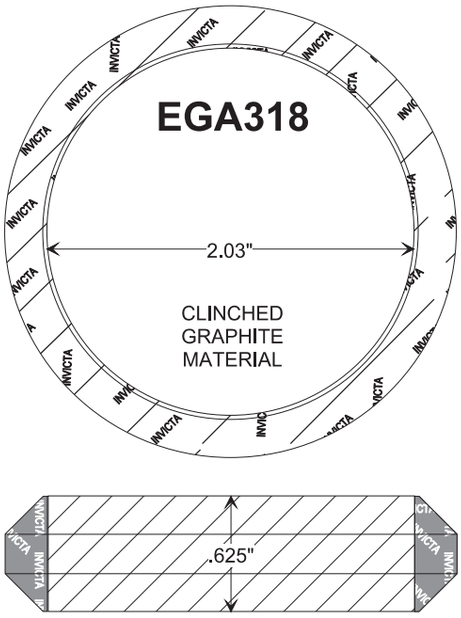

DESIGN STYLE 9

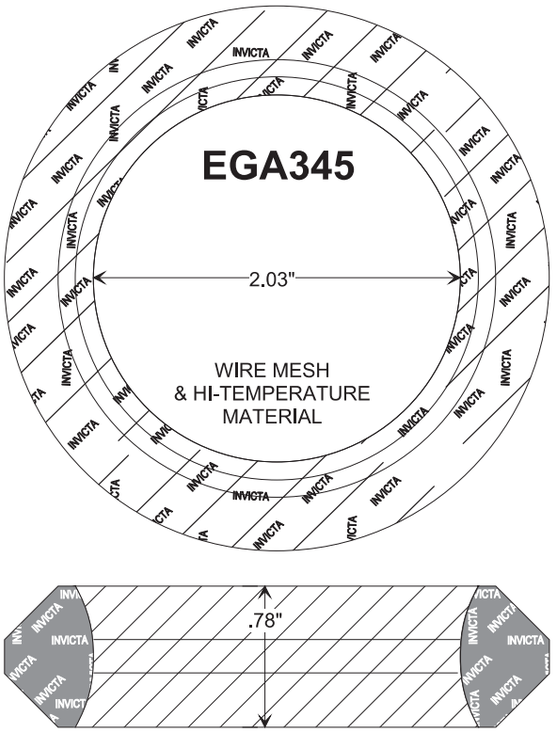

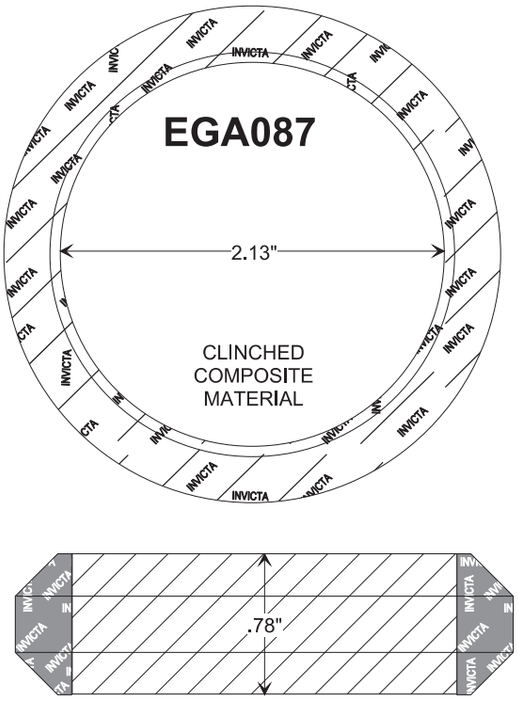

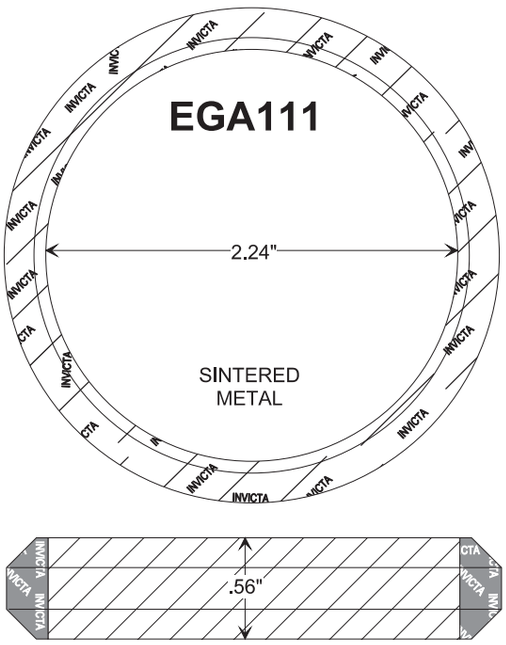

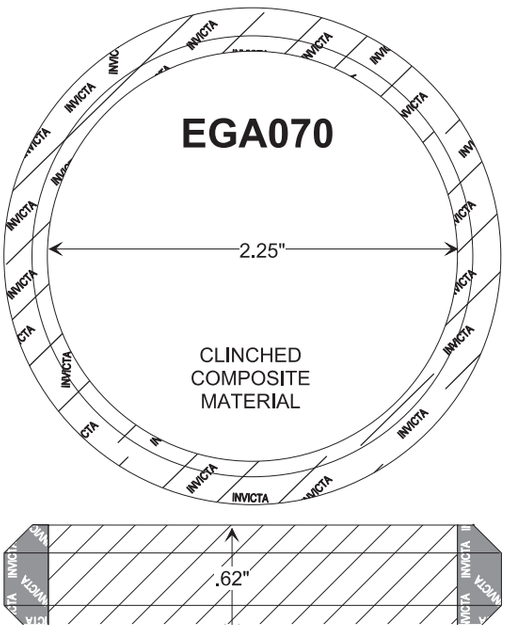

DESIGN STYLE 9

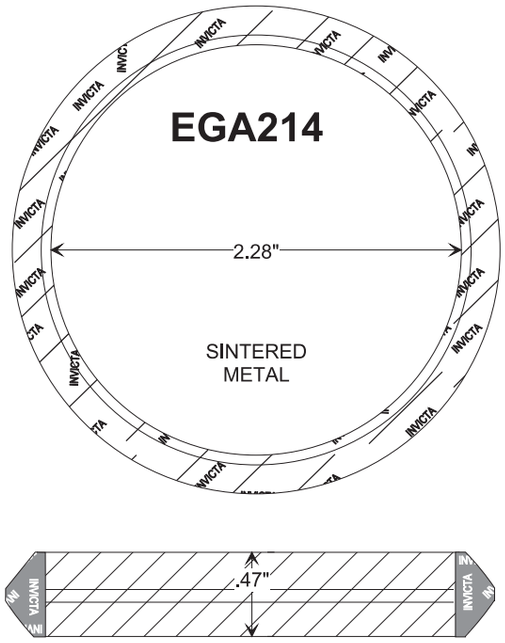

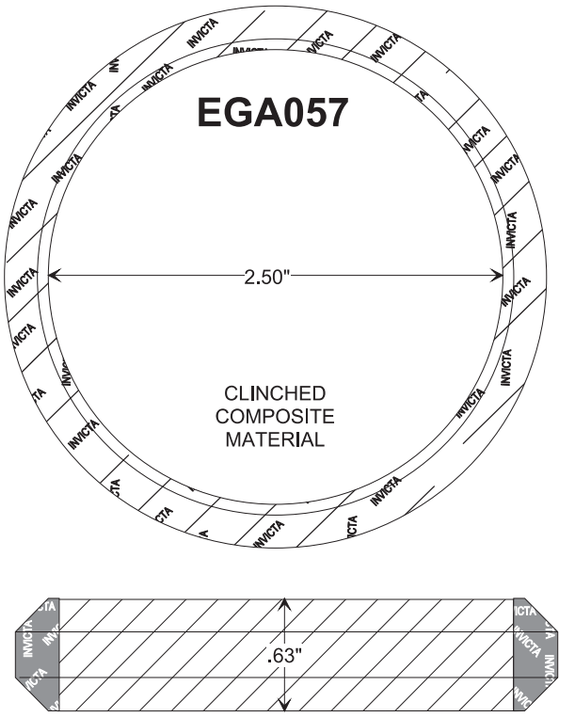

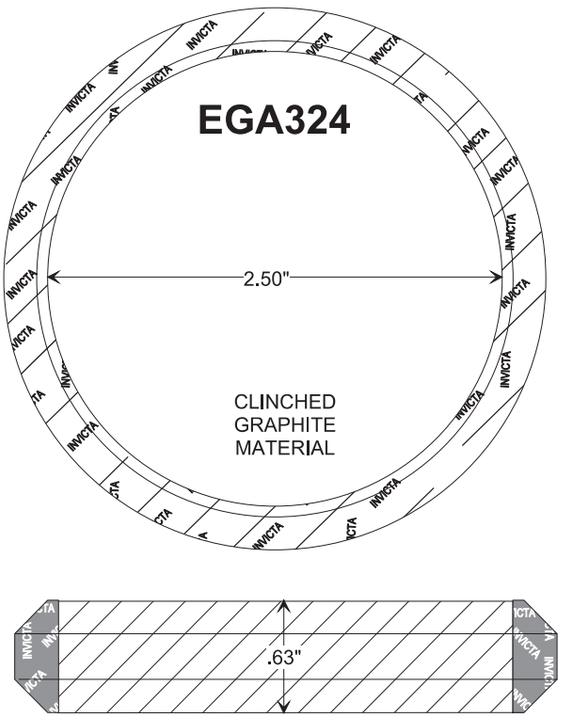

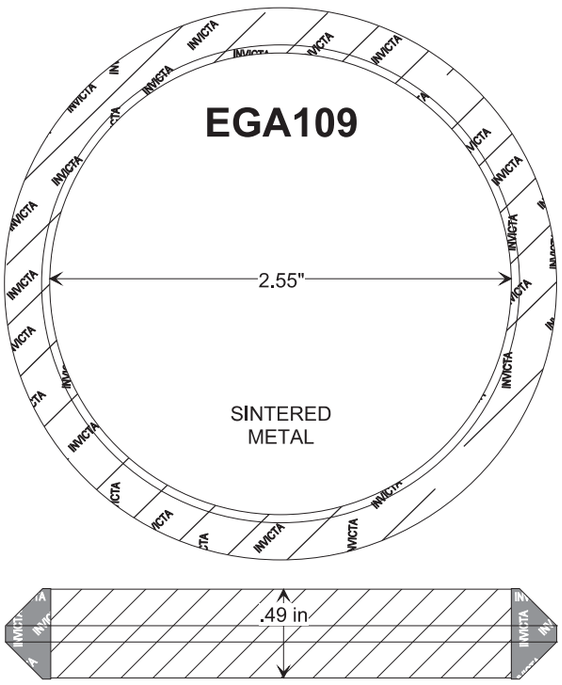

DESIGN STYLE 9

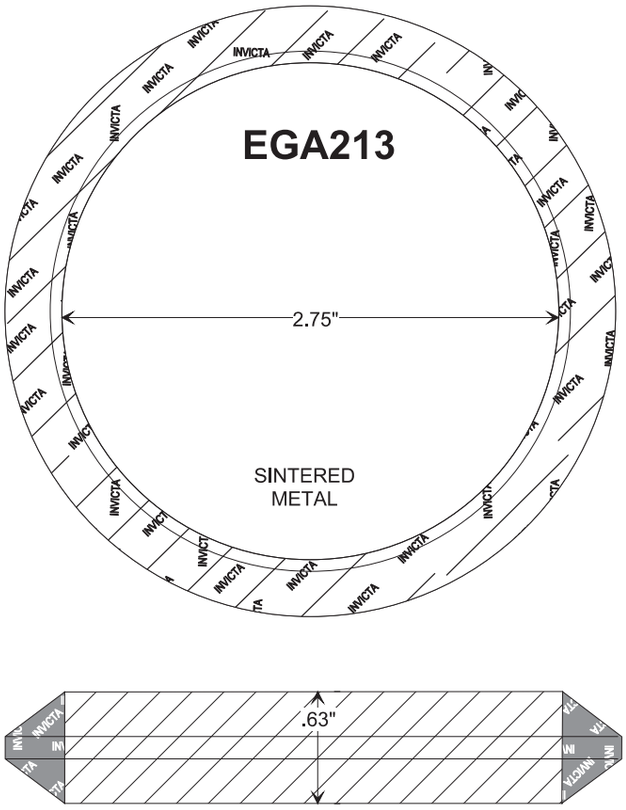

DESIGN STYLE 10

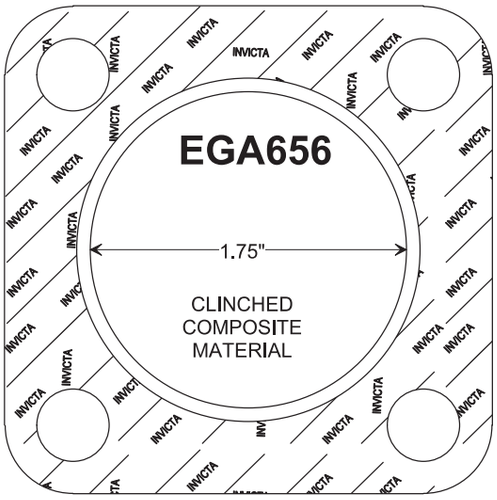

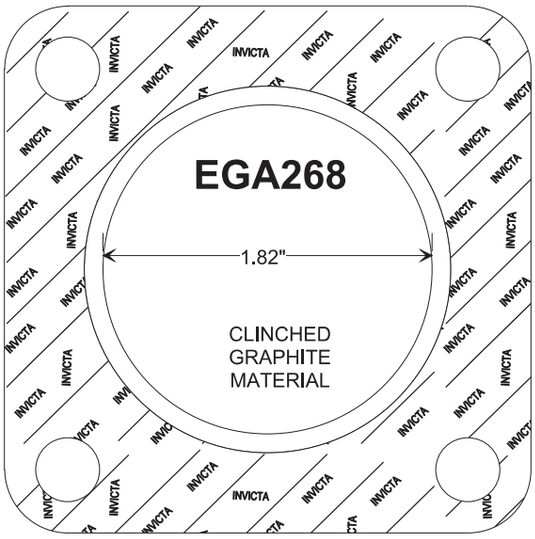

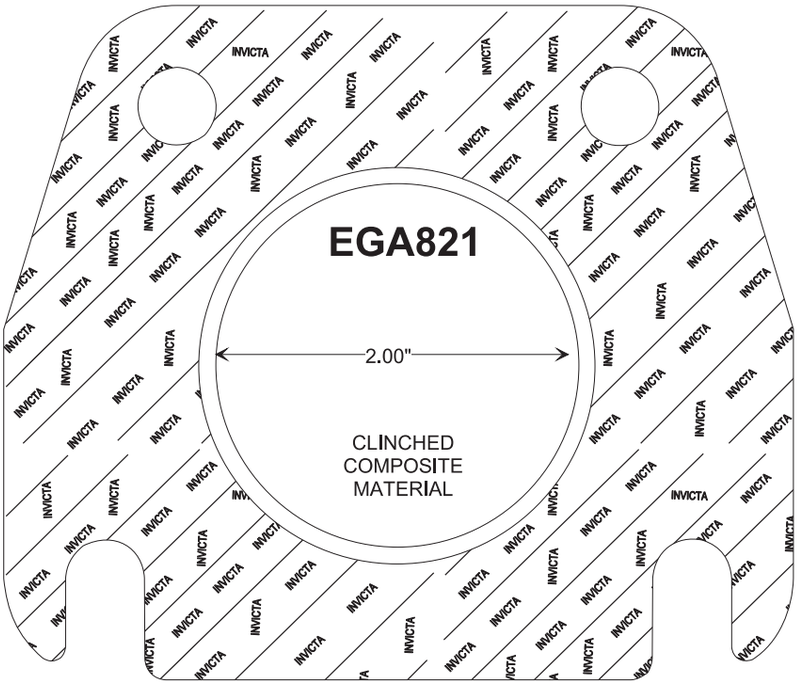

DESIGN STYLE 10

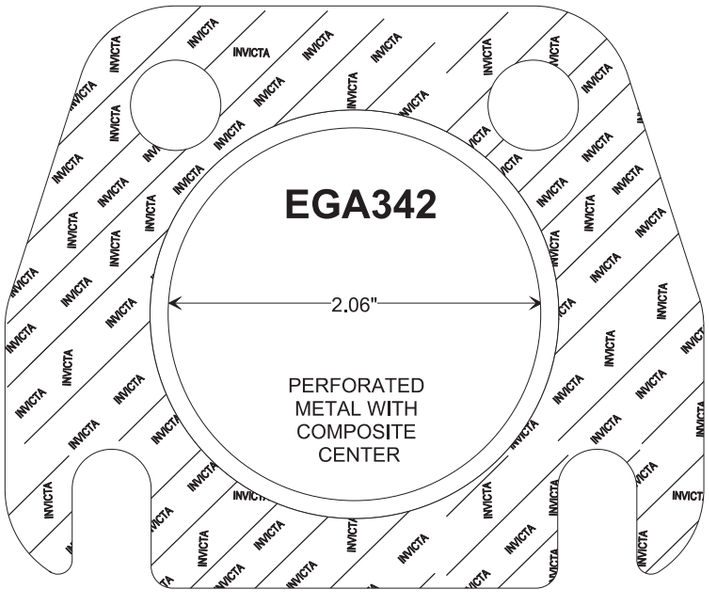

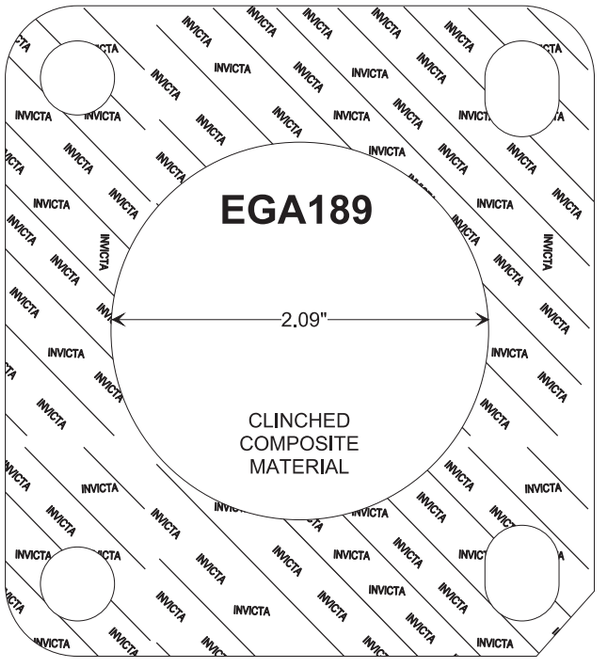

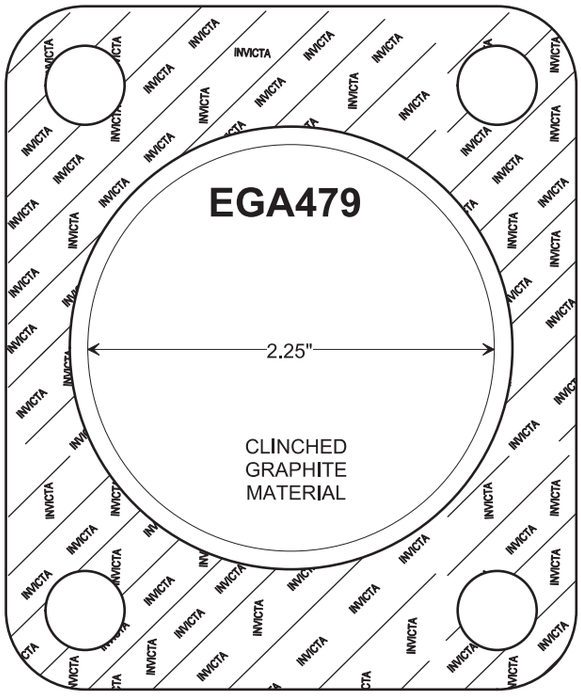

DESIGN STYLE 10

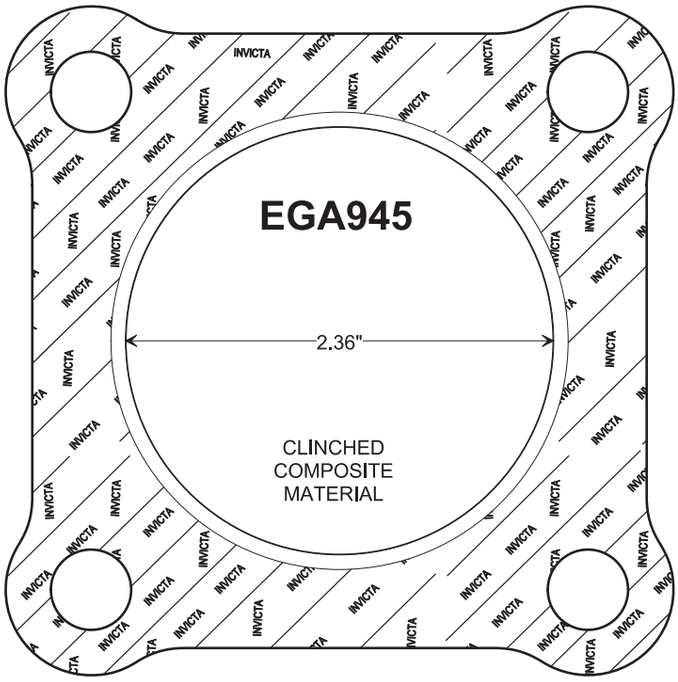

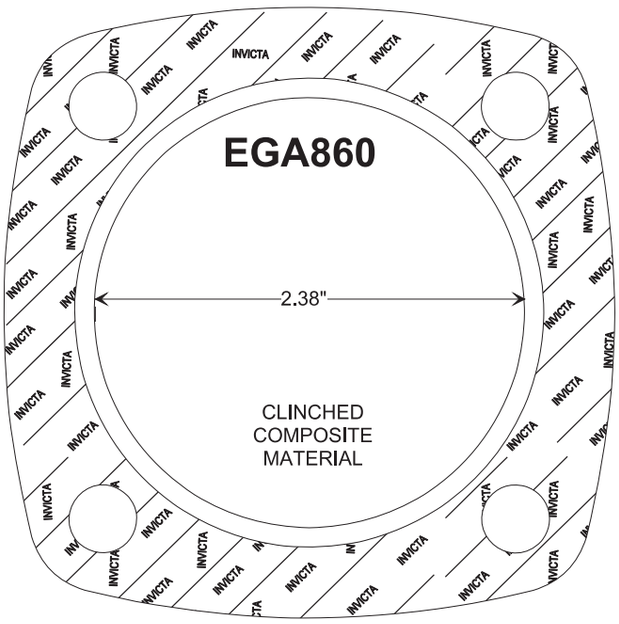

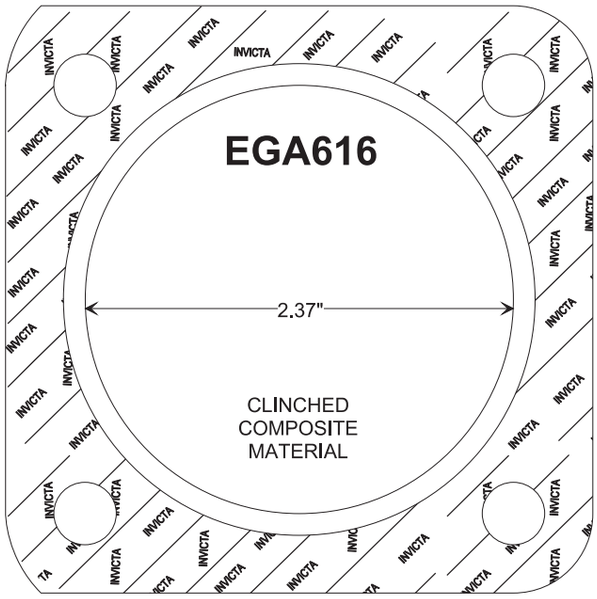

DESIGN STYLE 10

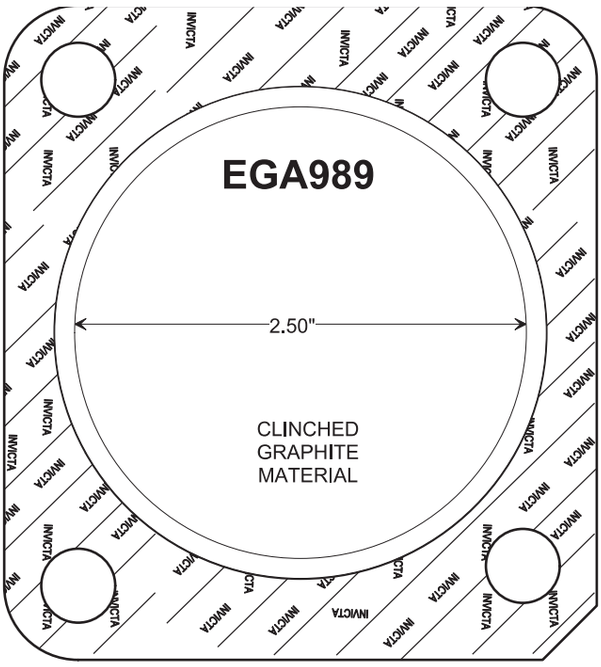

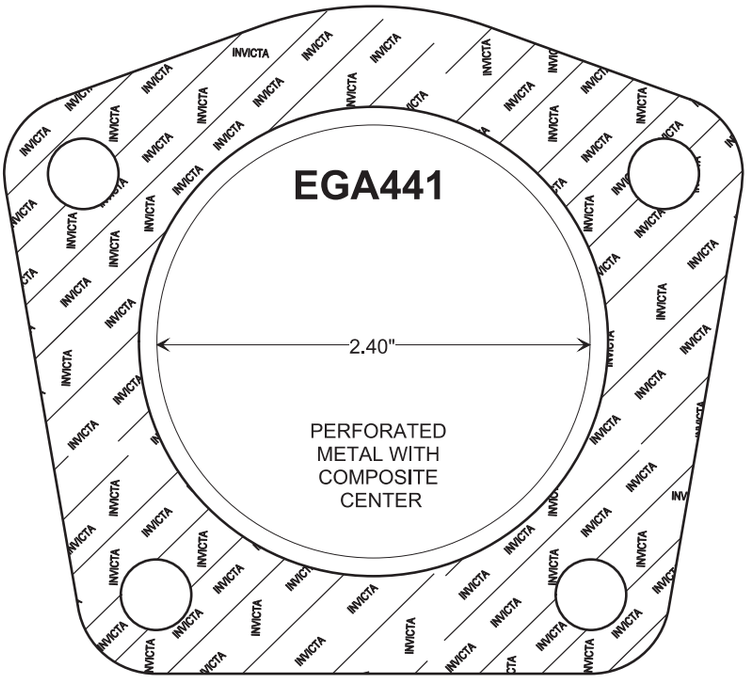

DESIGN STYLE 10

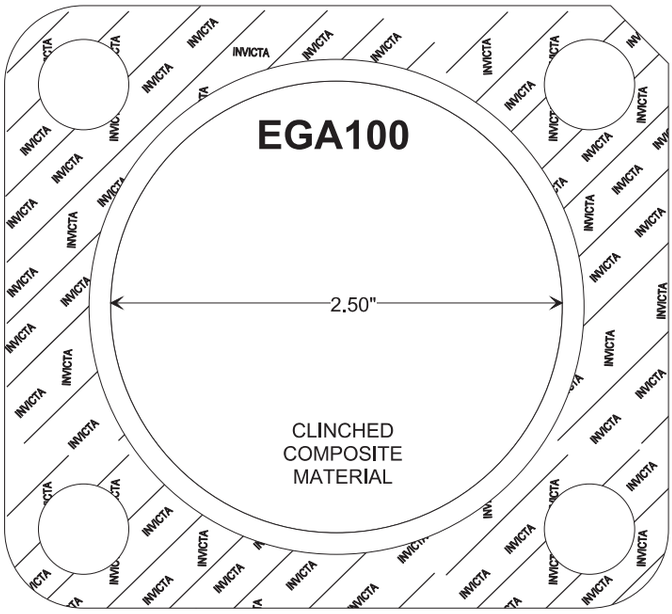

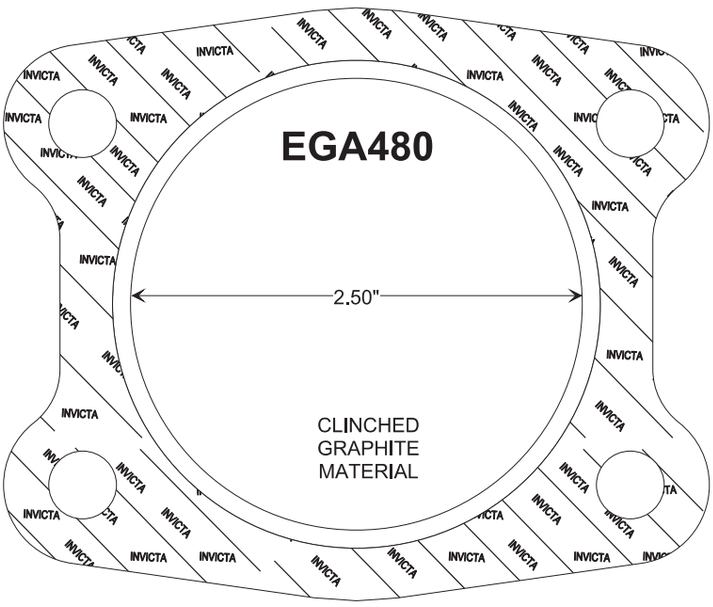

DESIGN STYLE 10

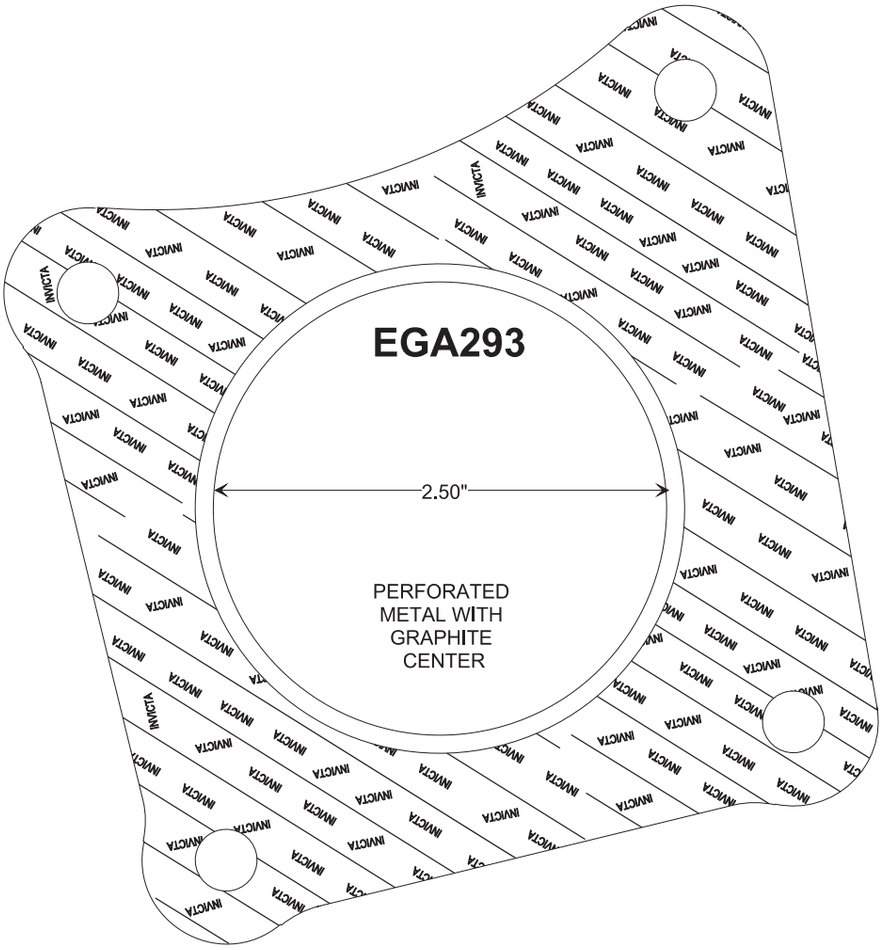

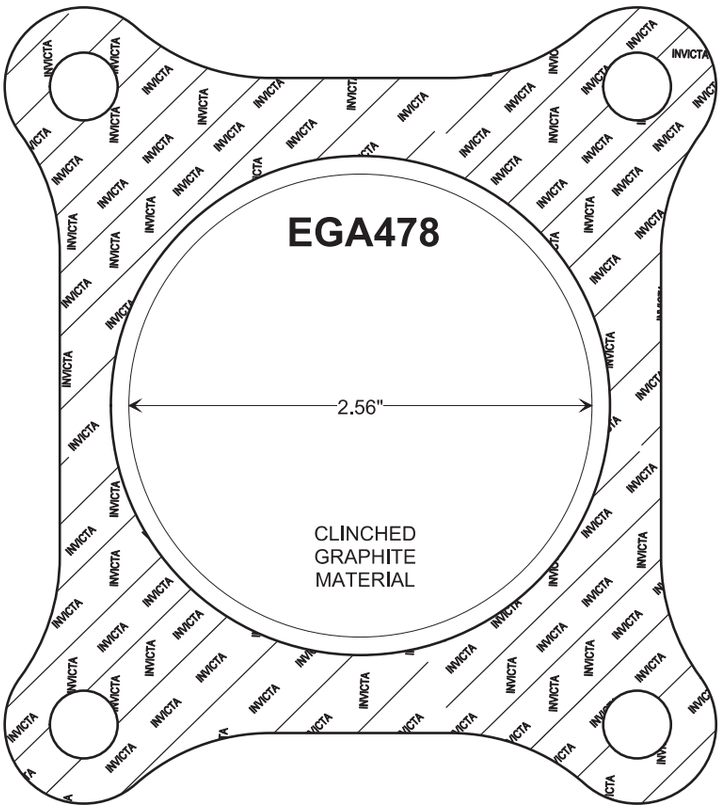

DESIGN STYLE 10

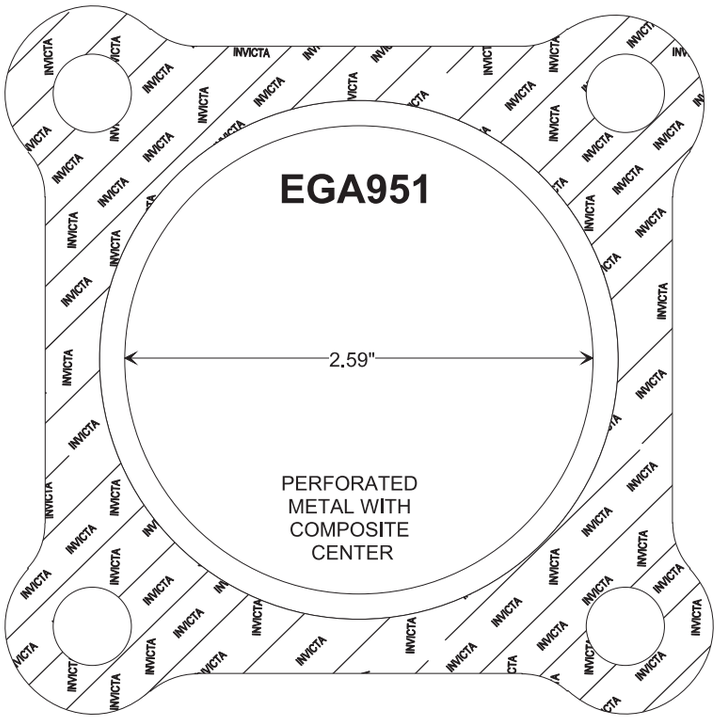

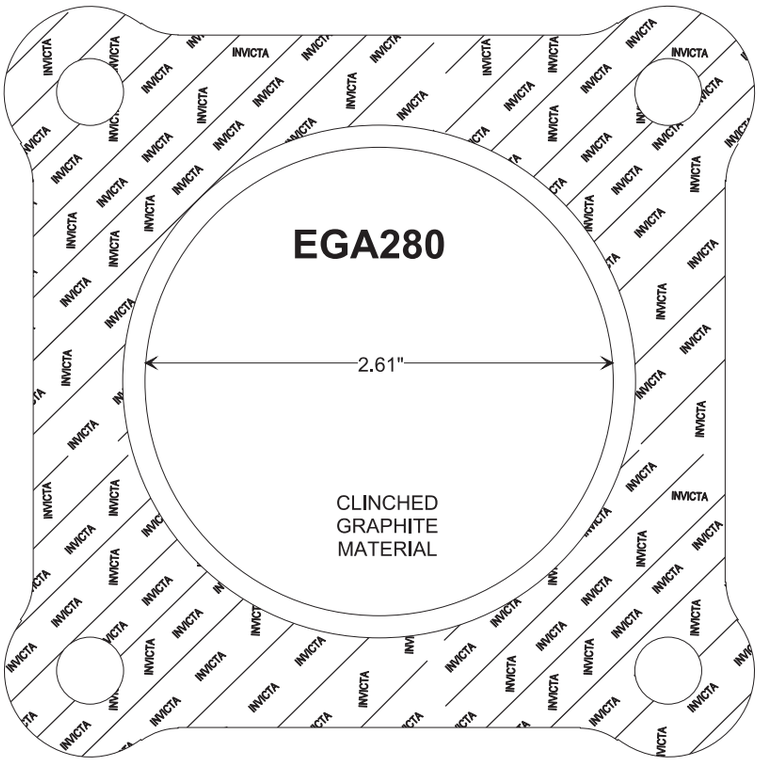

DESIGN STYLE 10

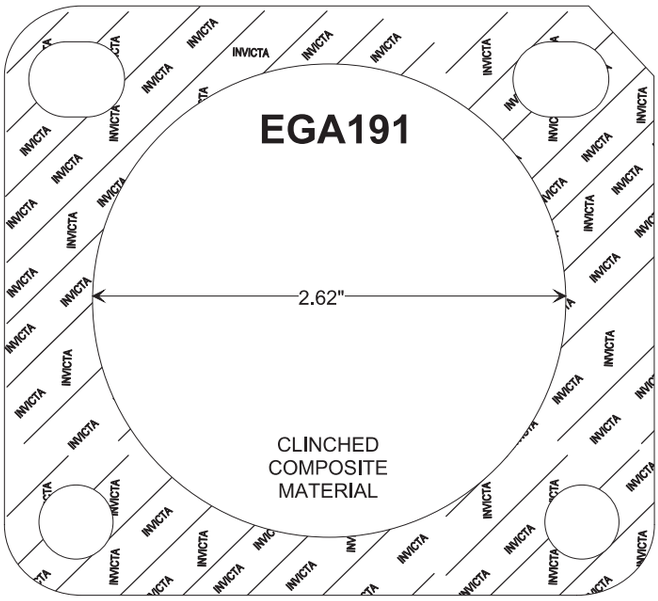

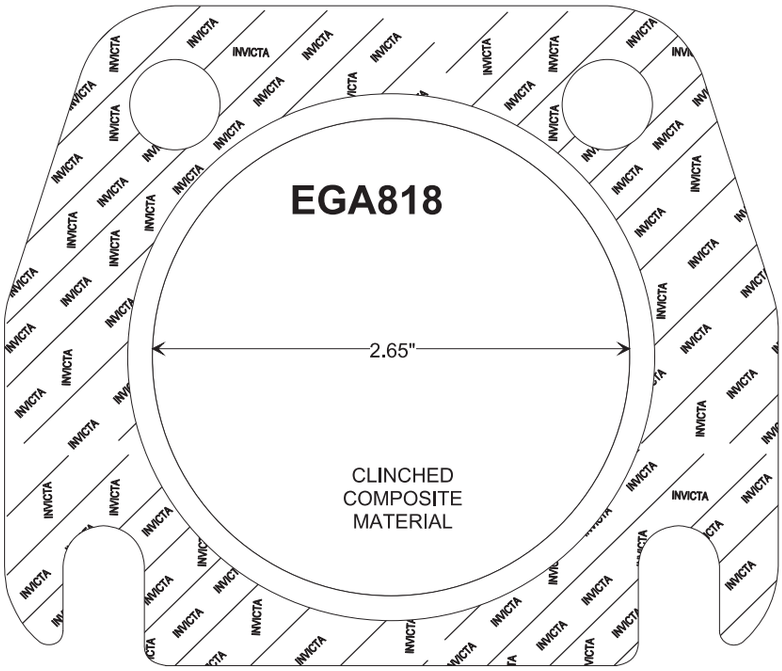

DESIGN STYLE 10

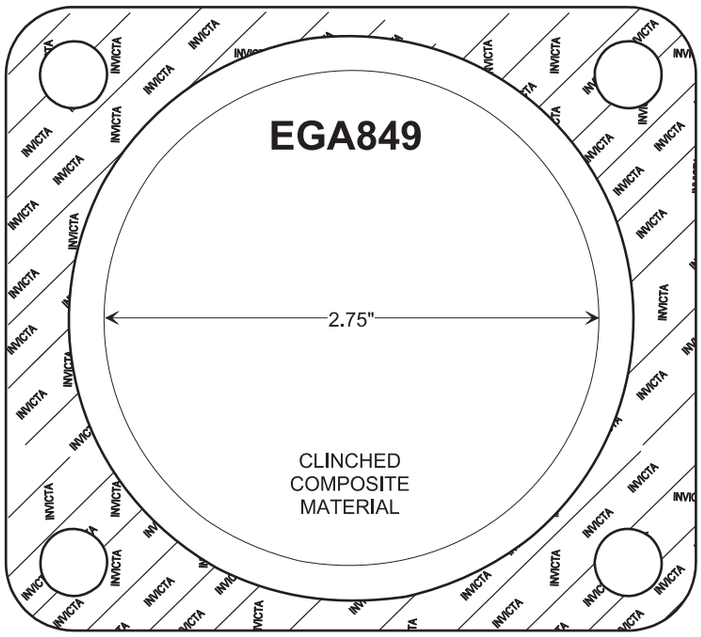

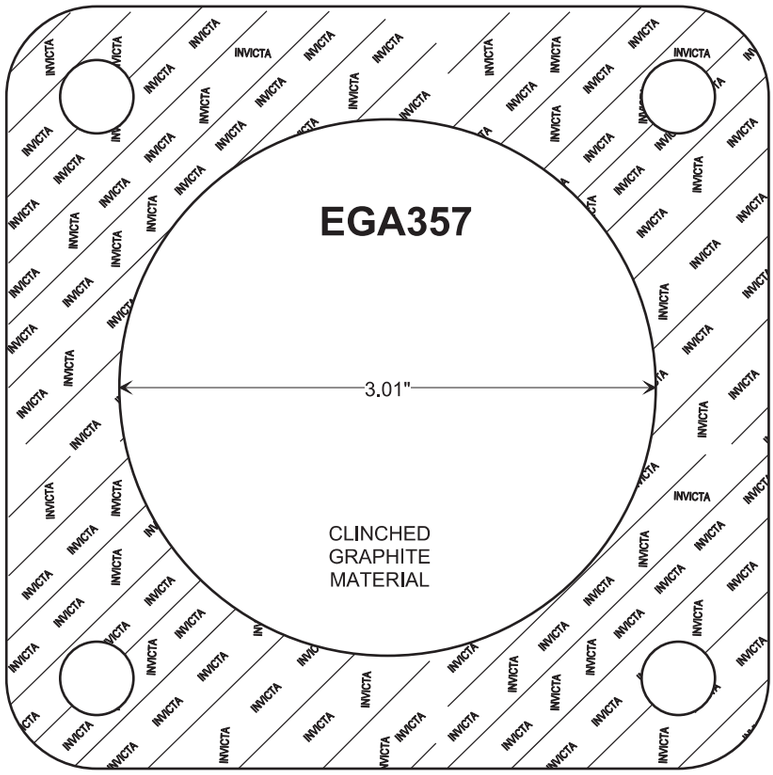

DESIGN STYLE 10

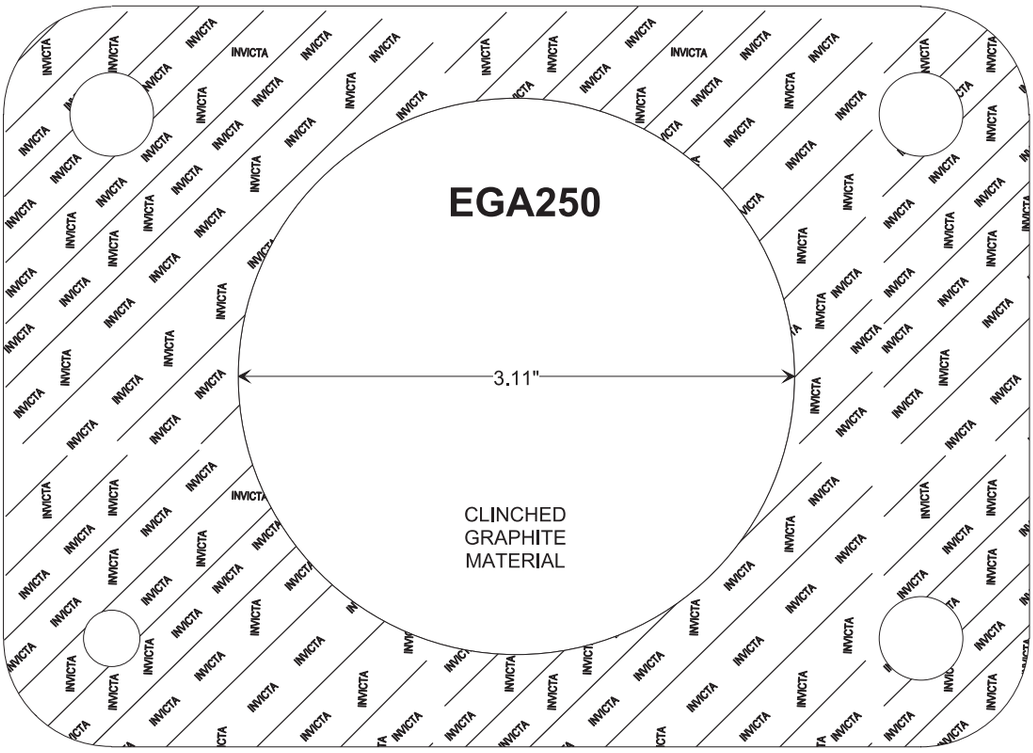

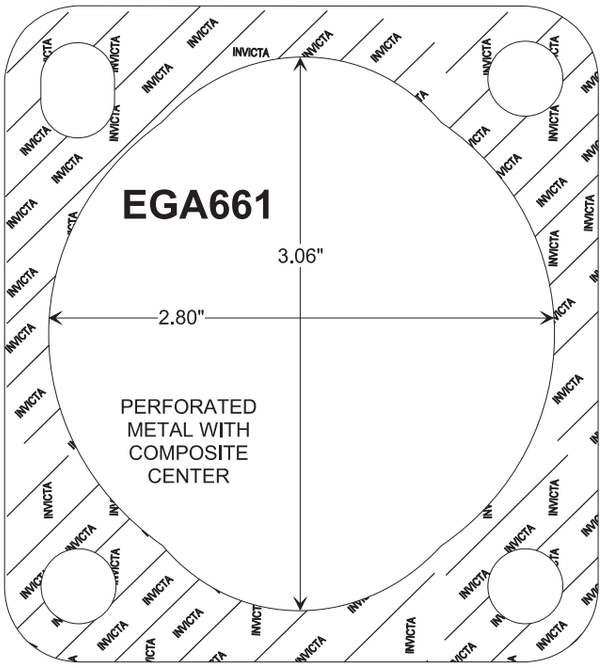

DESIGN STYLE 11

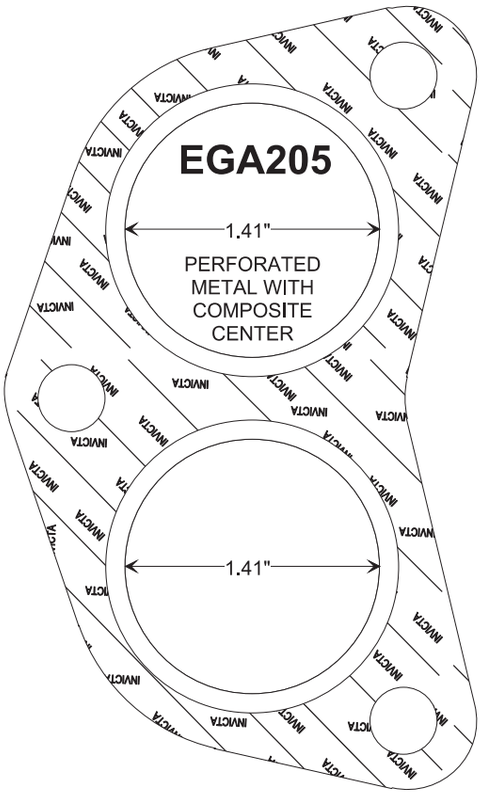

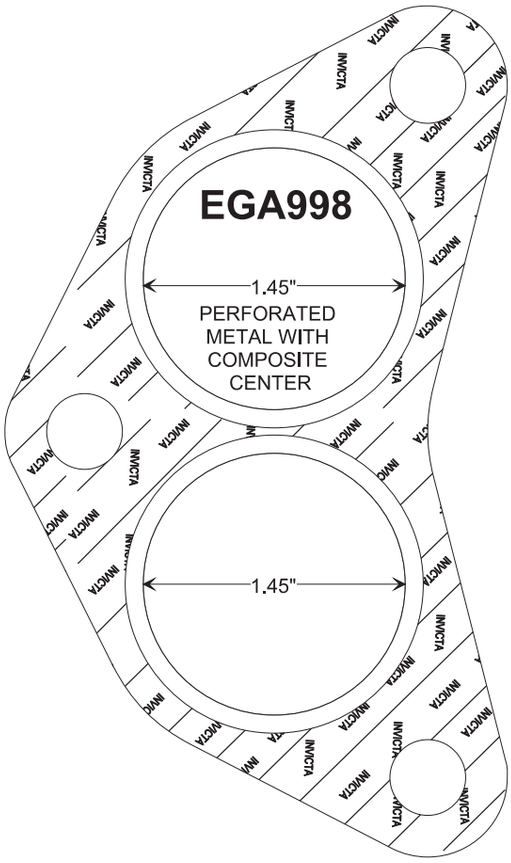

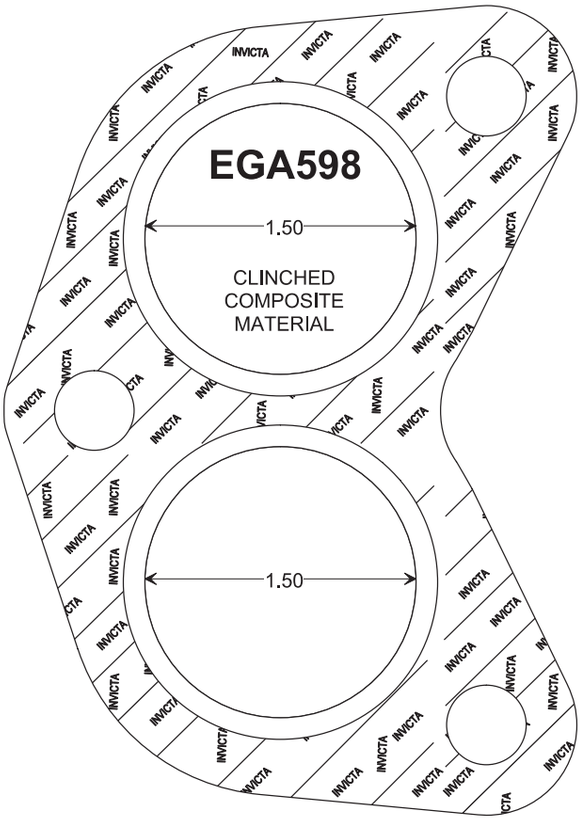

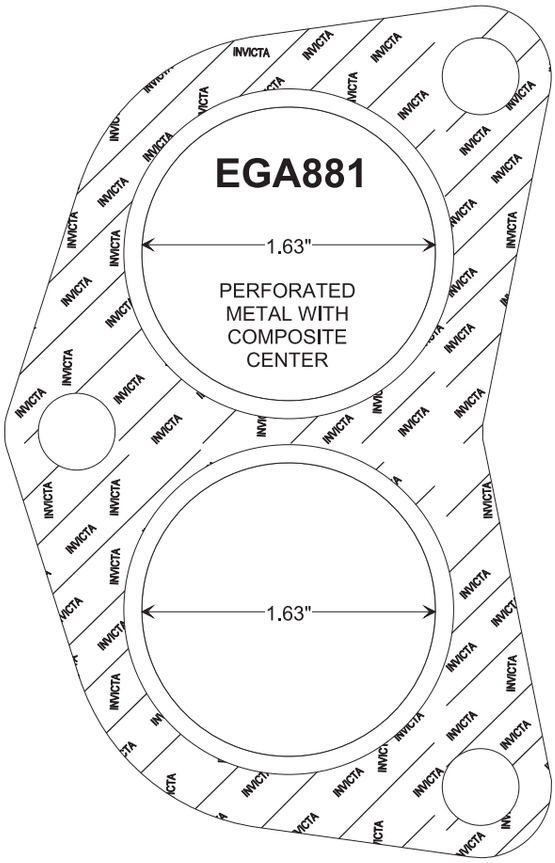

DESIGN STYLE 11

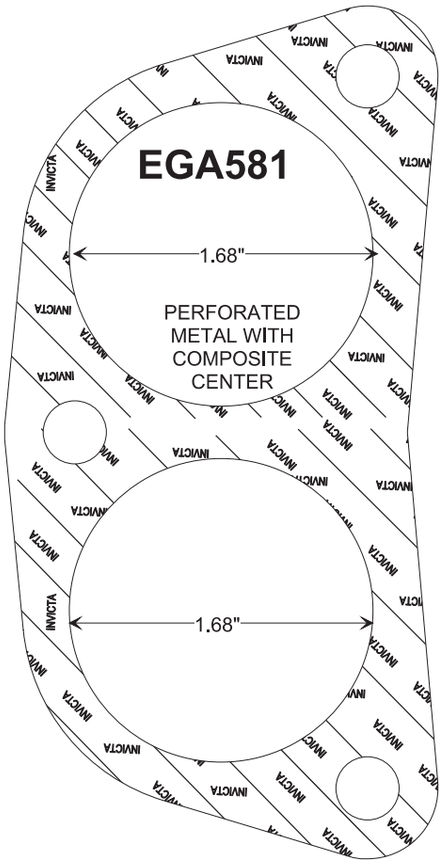

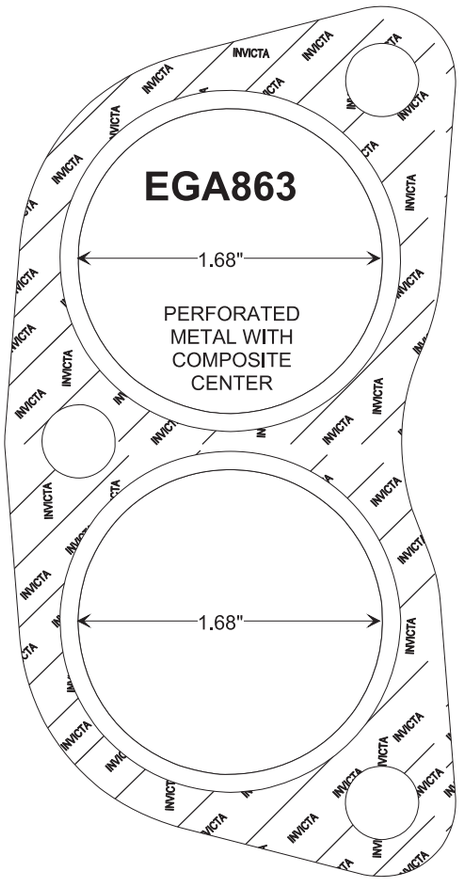

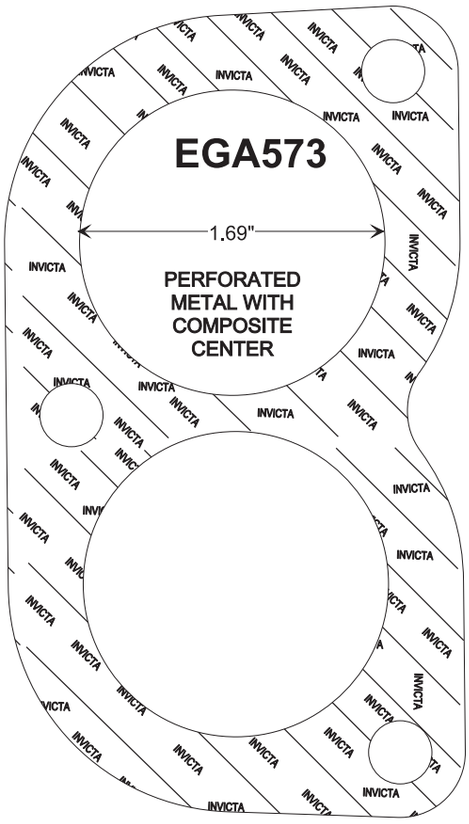

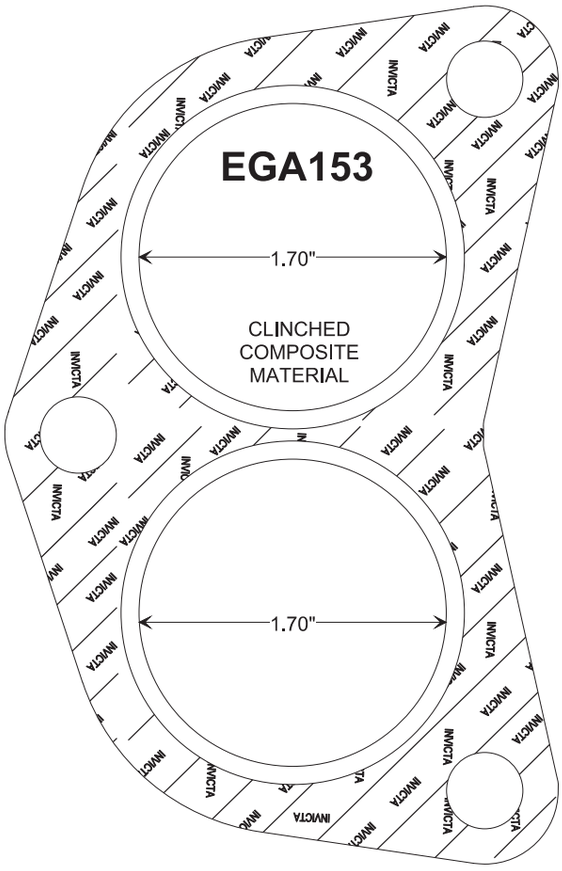

DESIGN STYLE 11

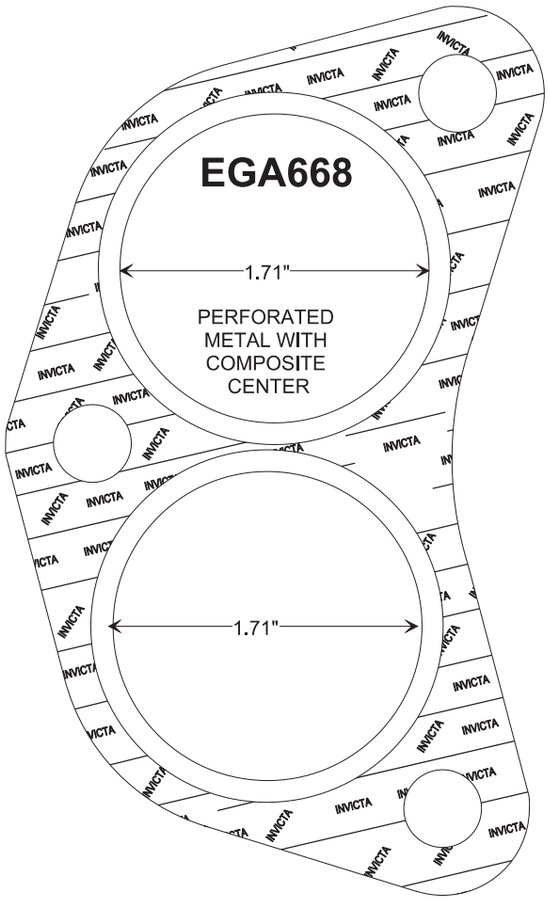

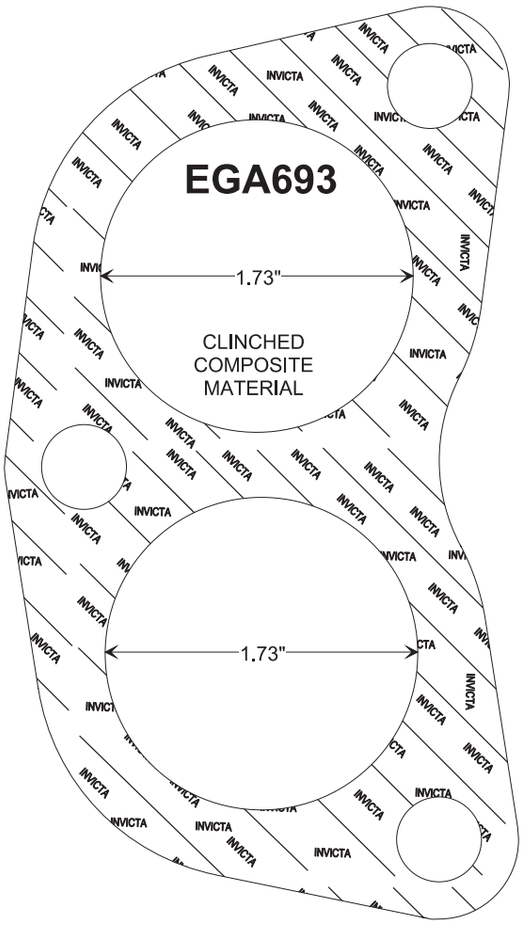

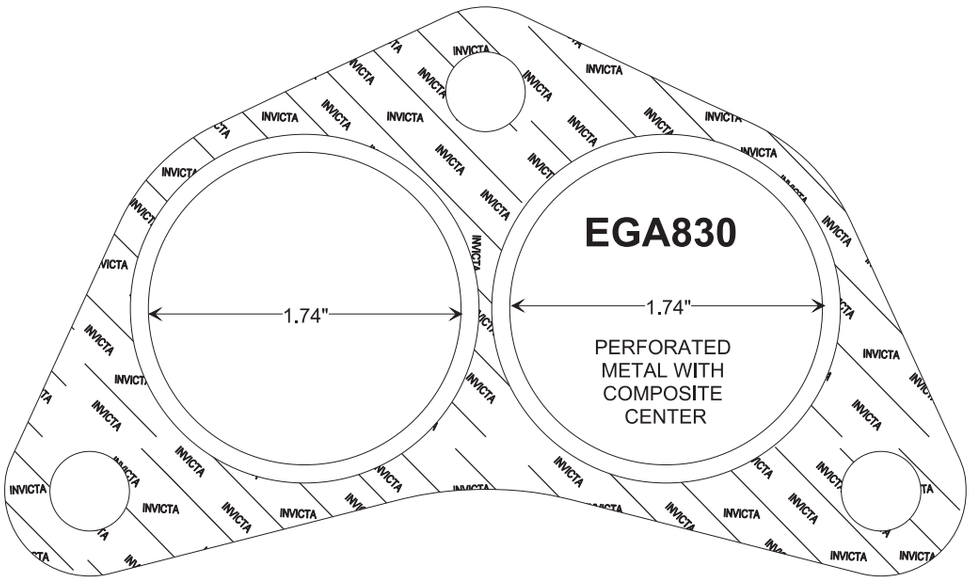

DESIGN STYLE 11

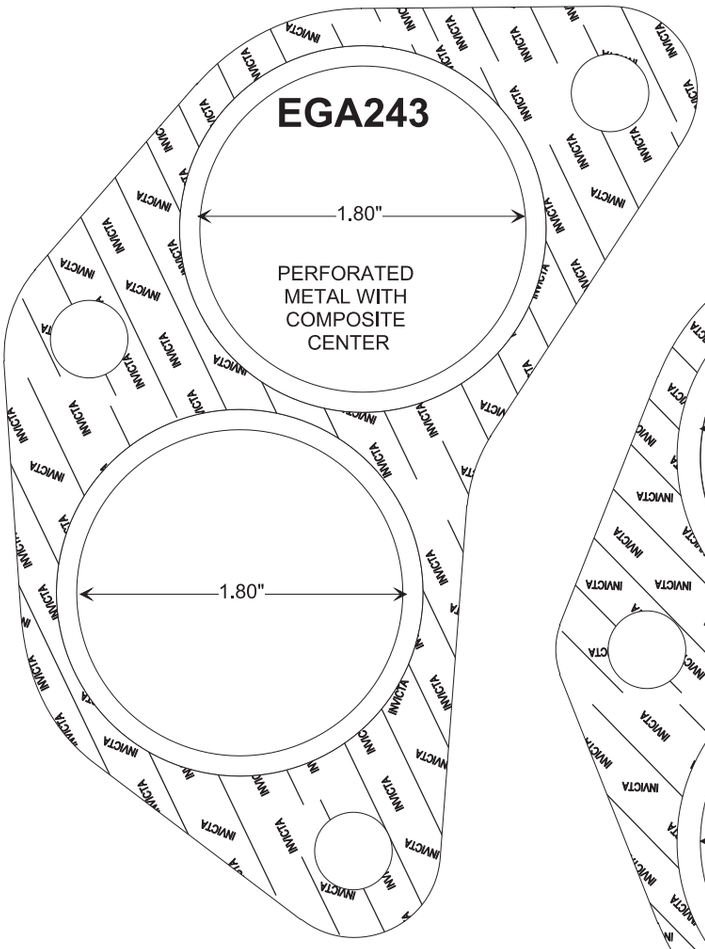

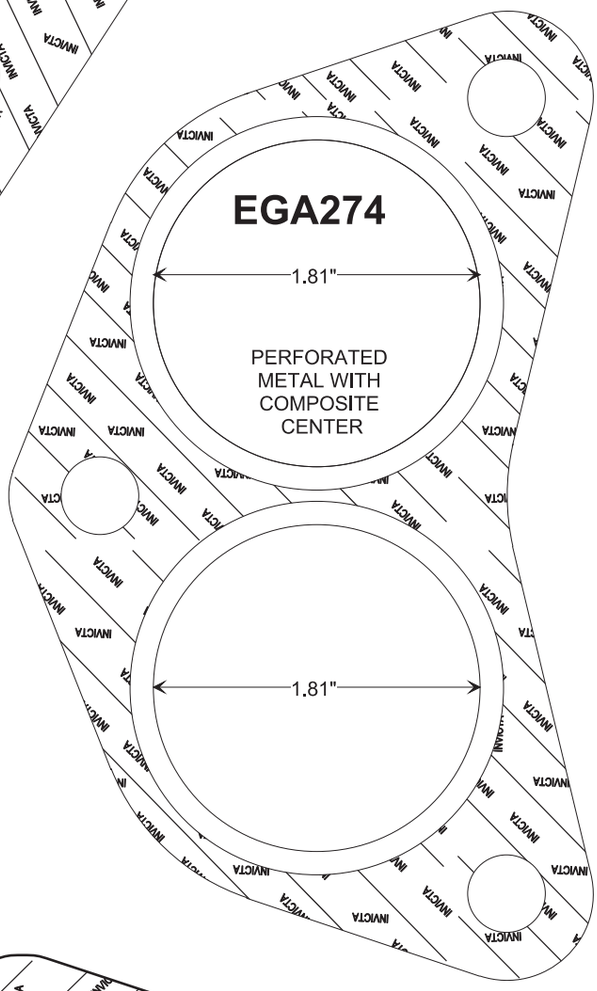

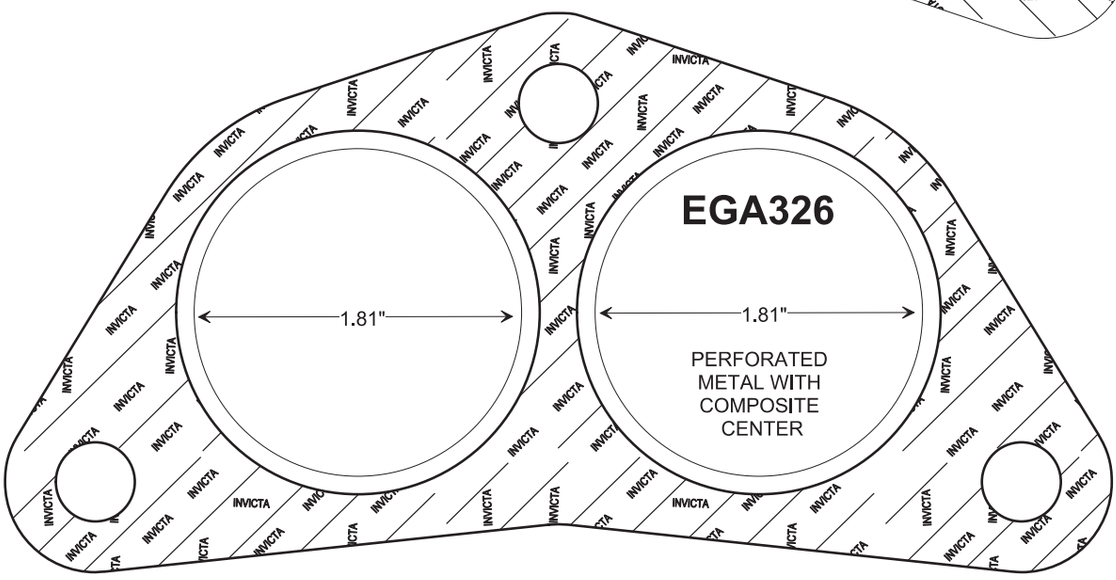

DESIGN STYLE 11

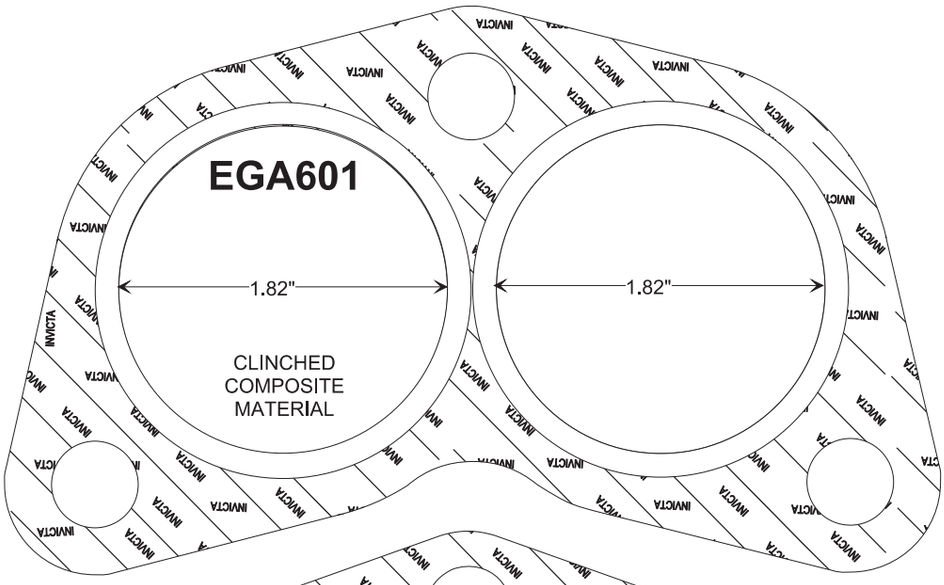

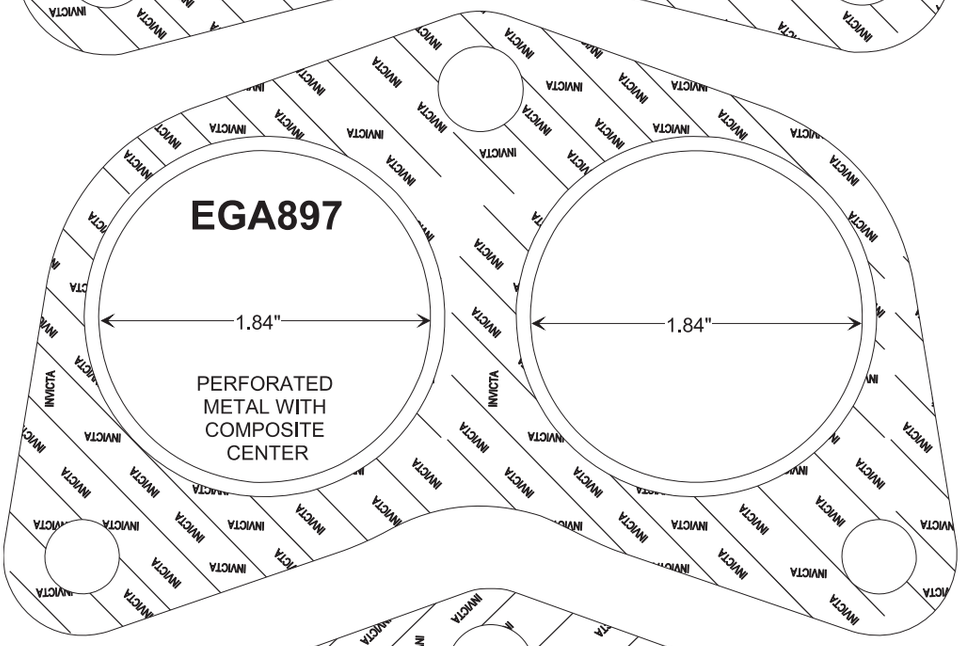

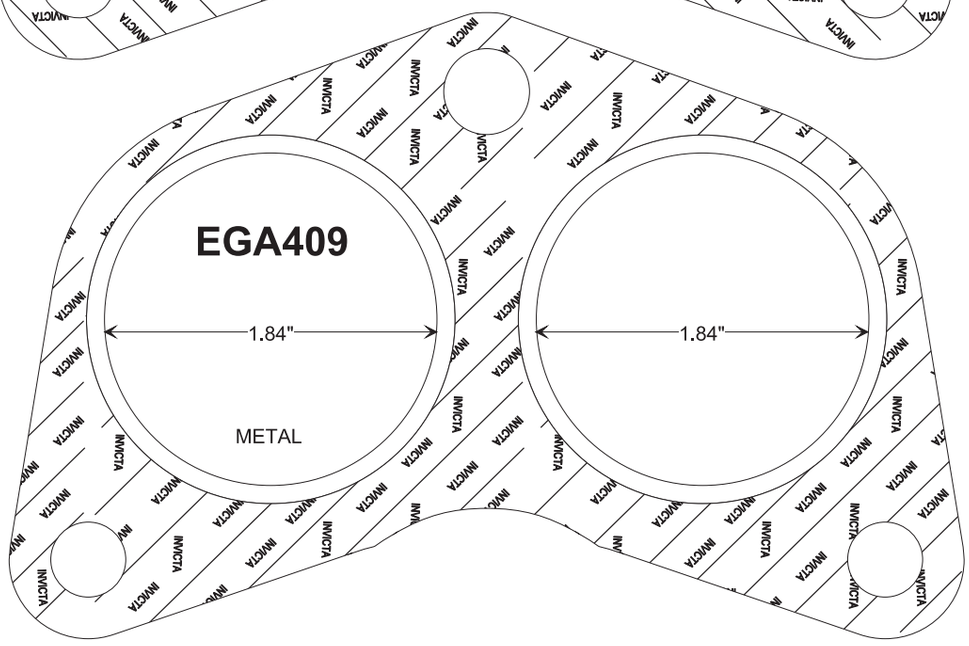

DESIGN STYLE 11

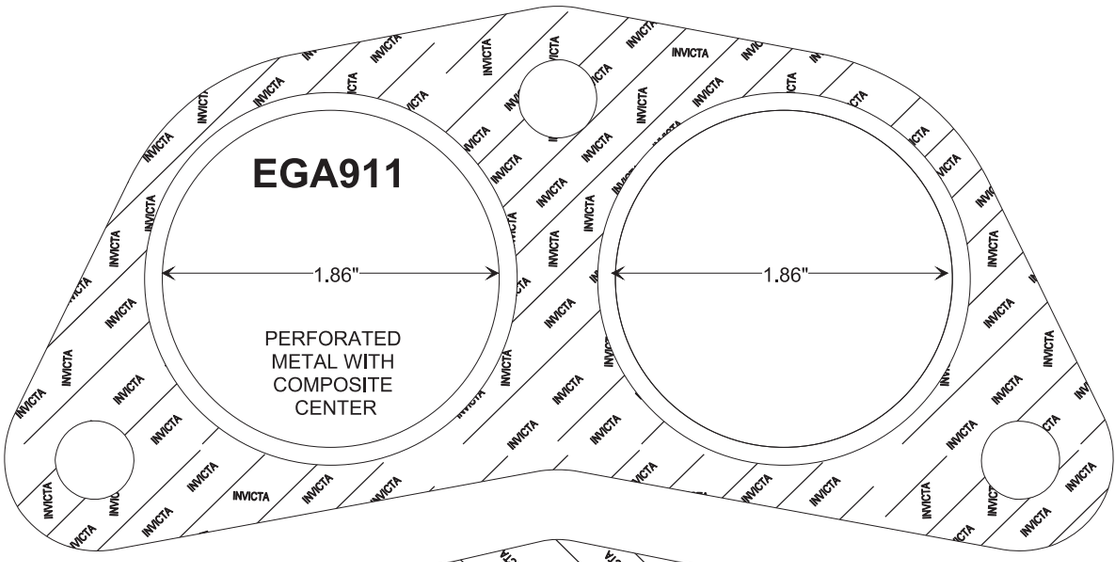

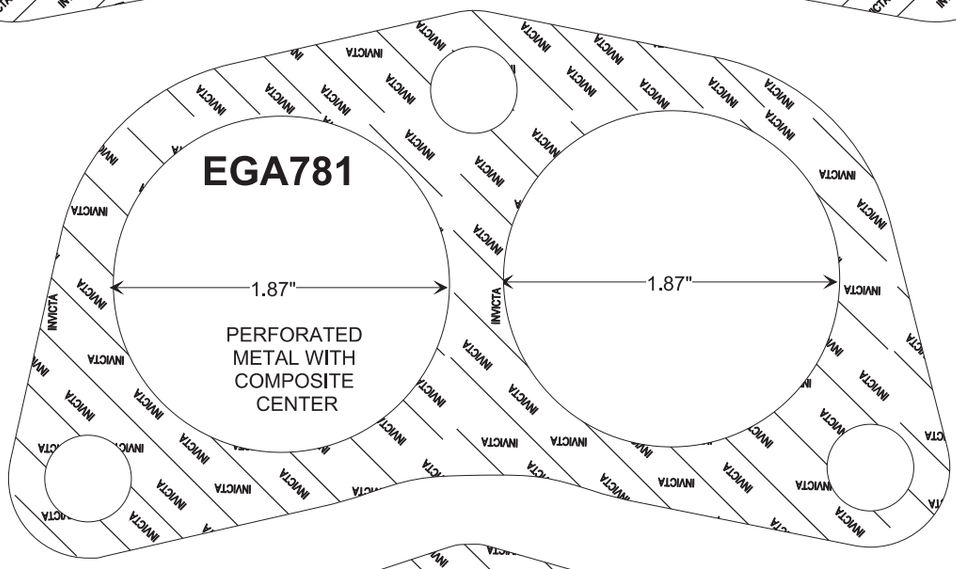

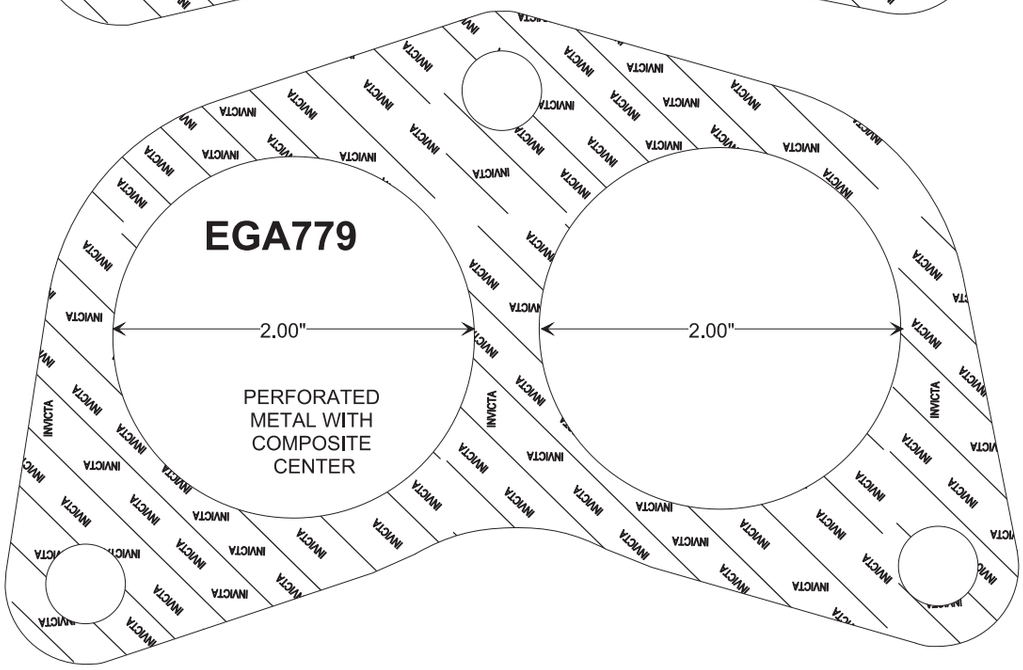

DESIGN STYLE 11

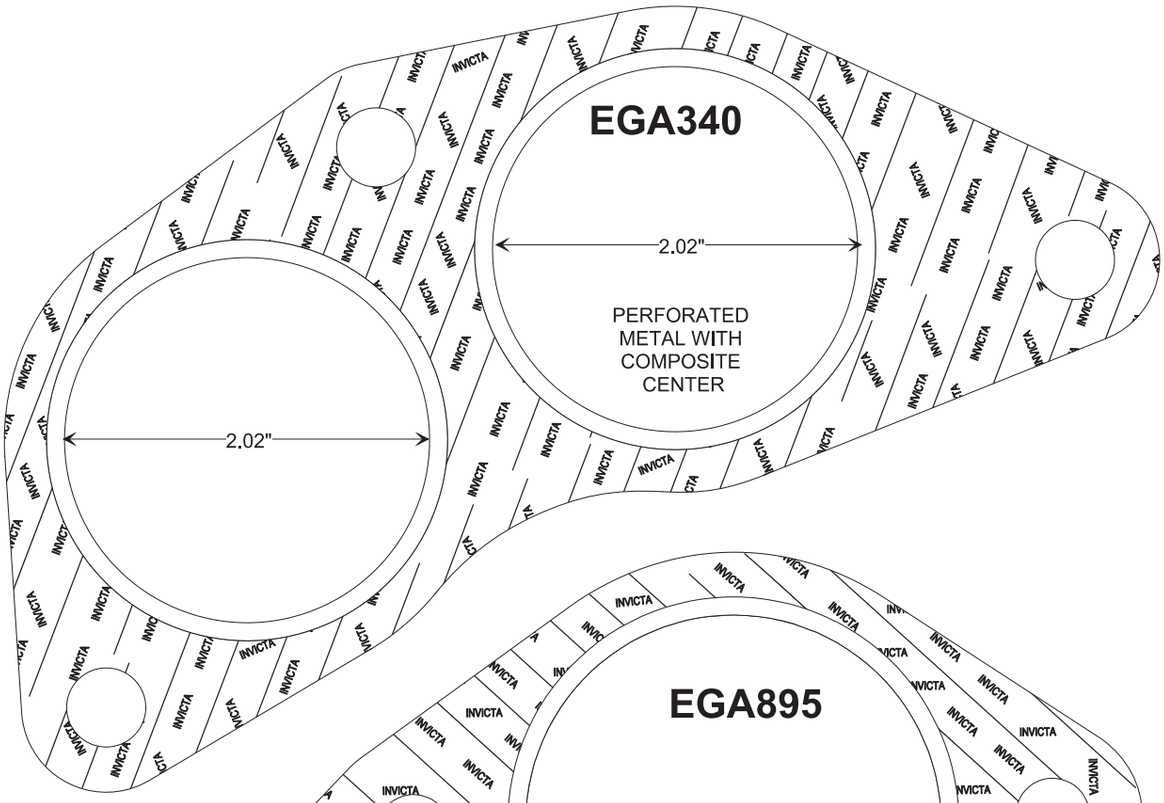

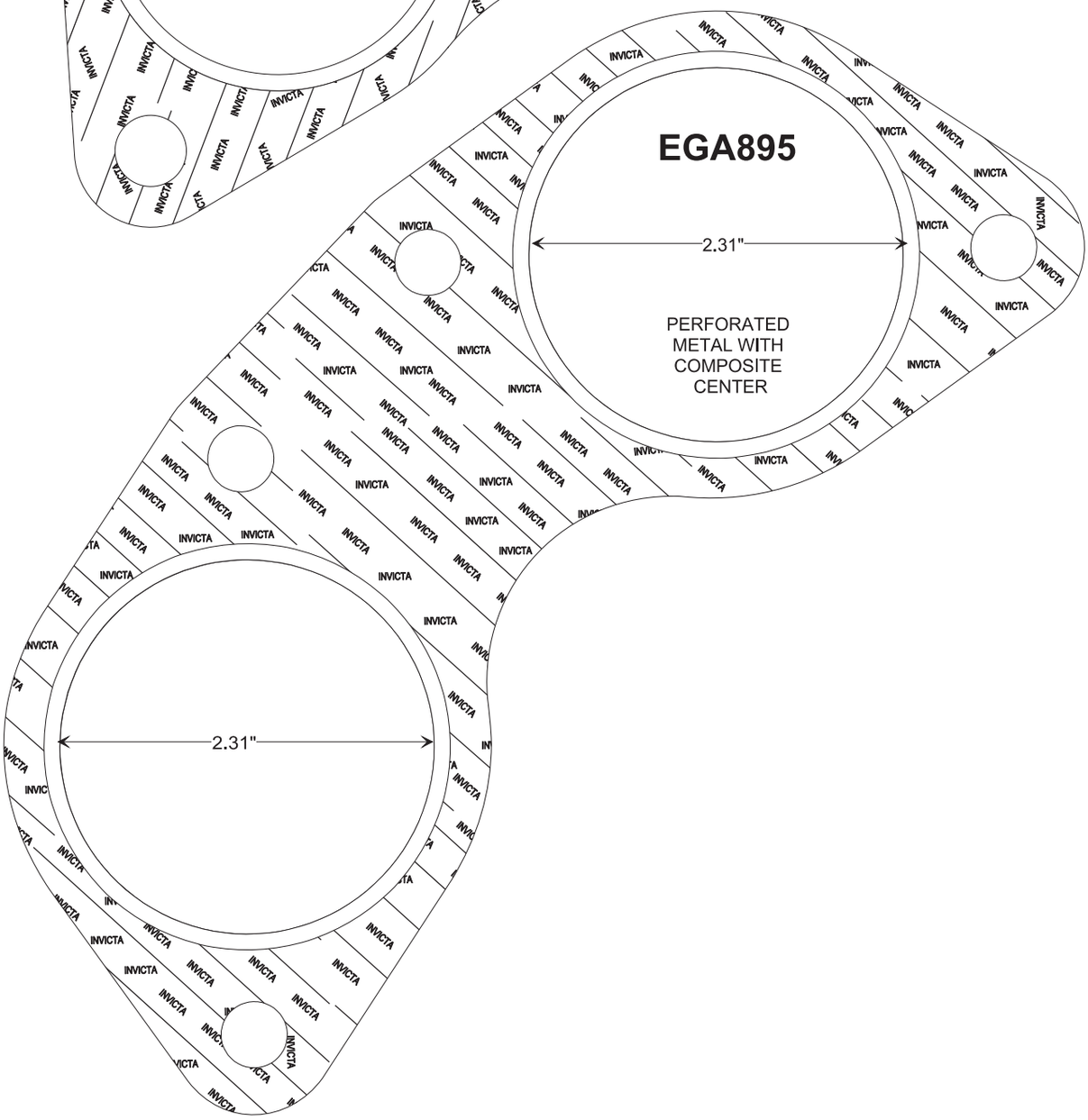

DESIGN STYLE 11

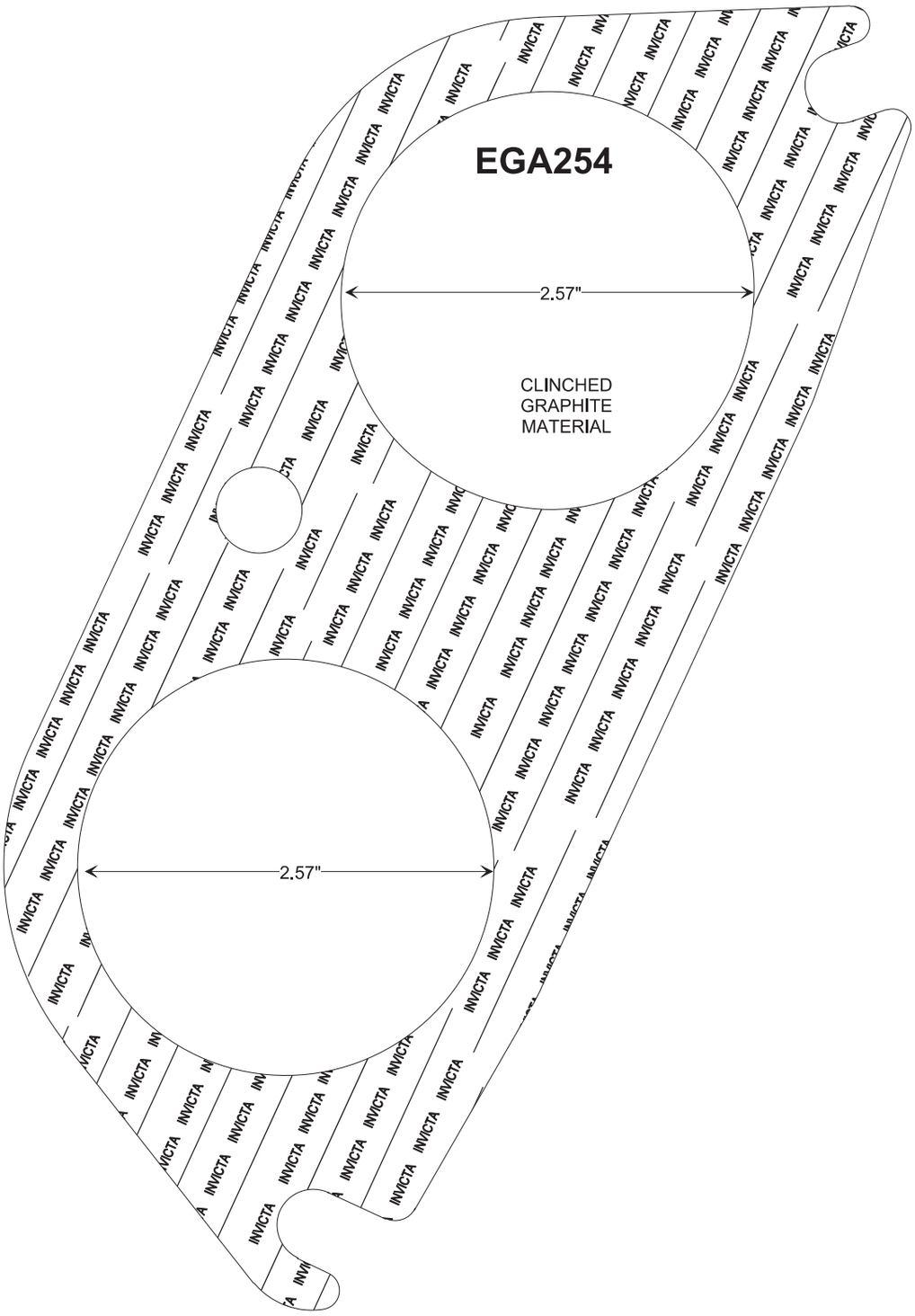

DESIGN STYLE 11

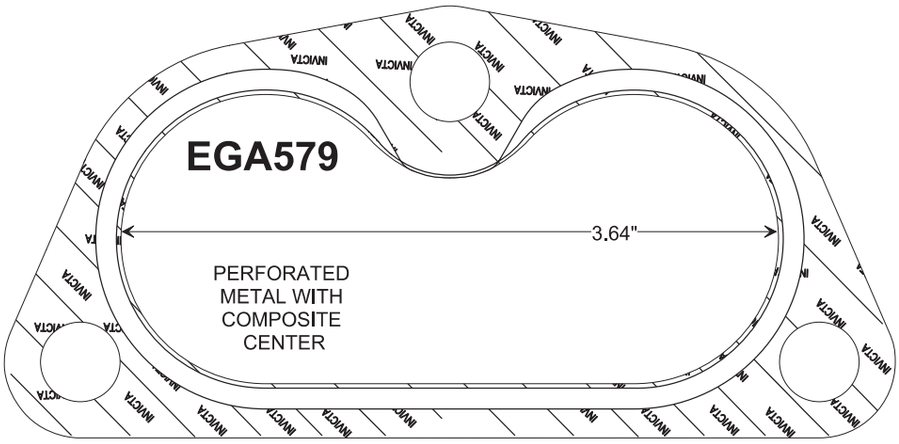

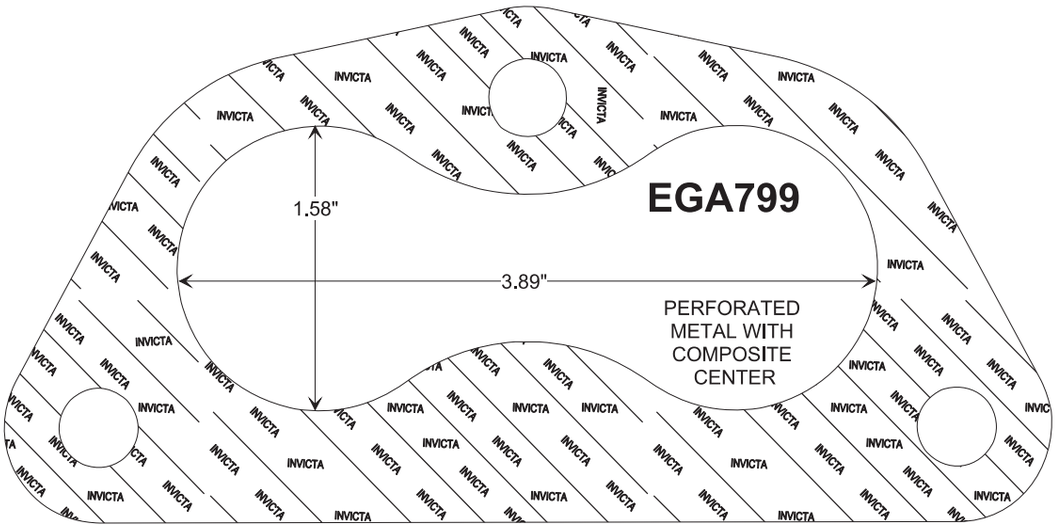

DESIGN STYLE 12

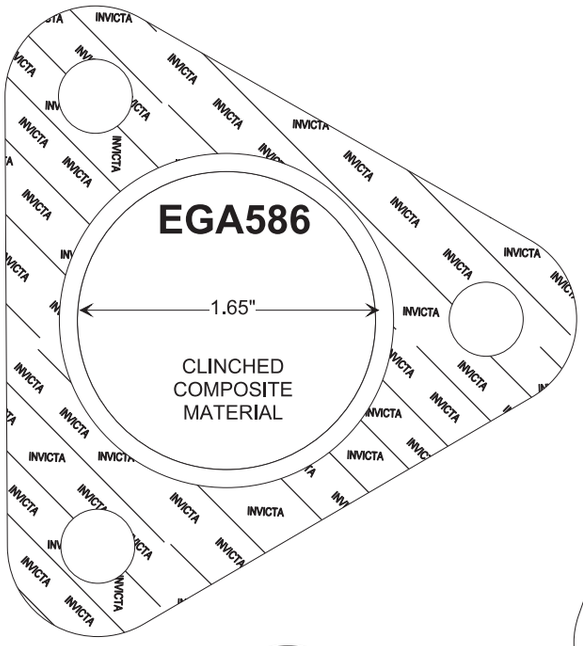

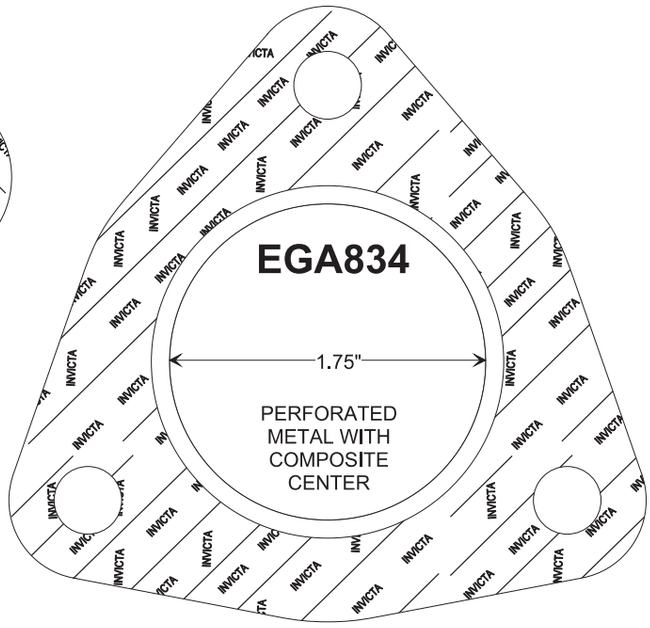

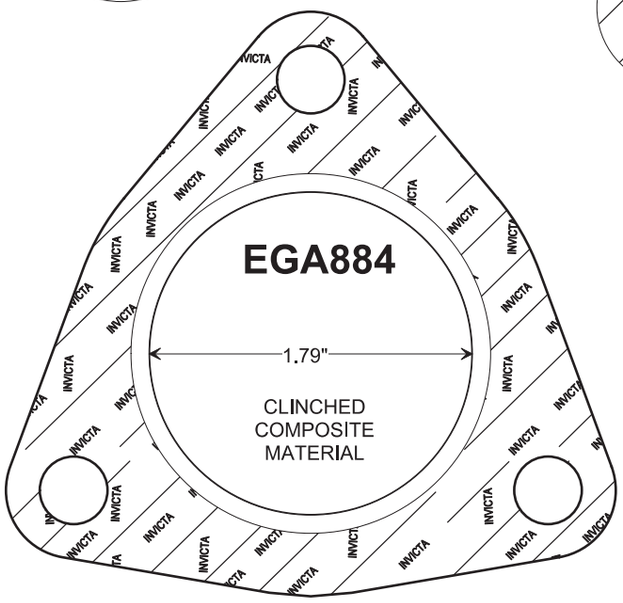

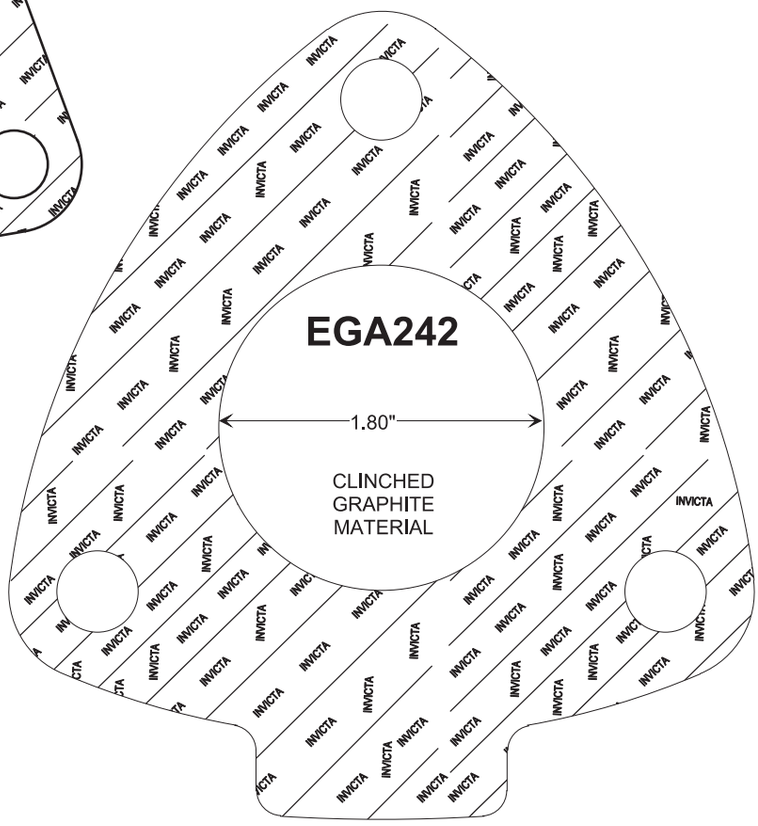

DESIGN STYLE 12

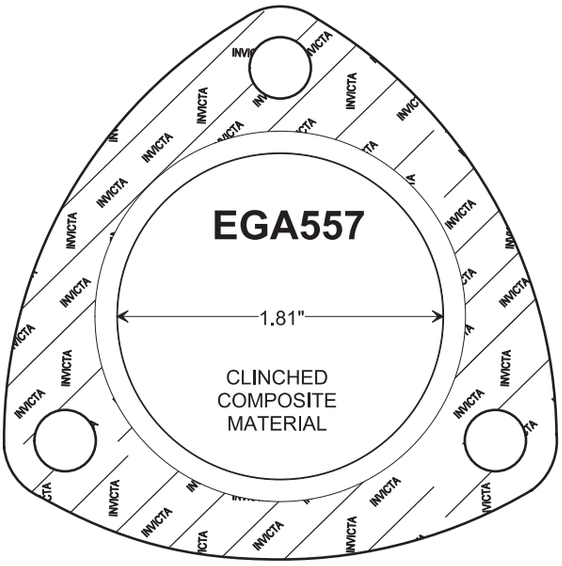

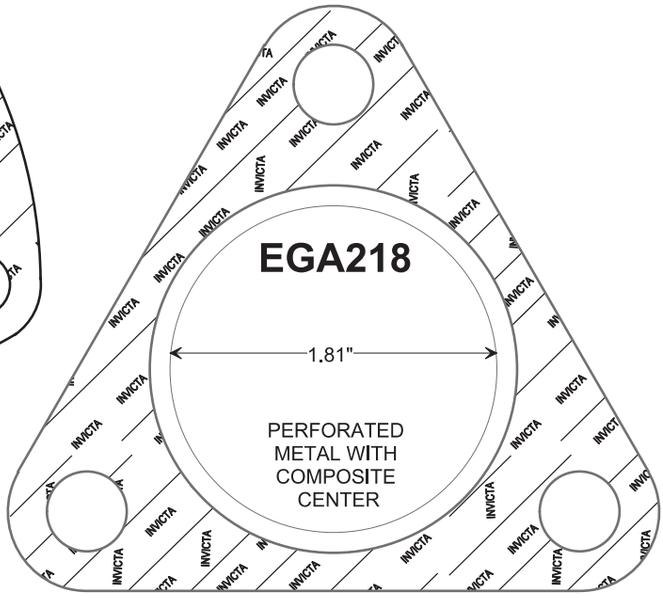

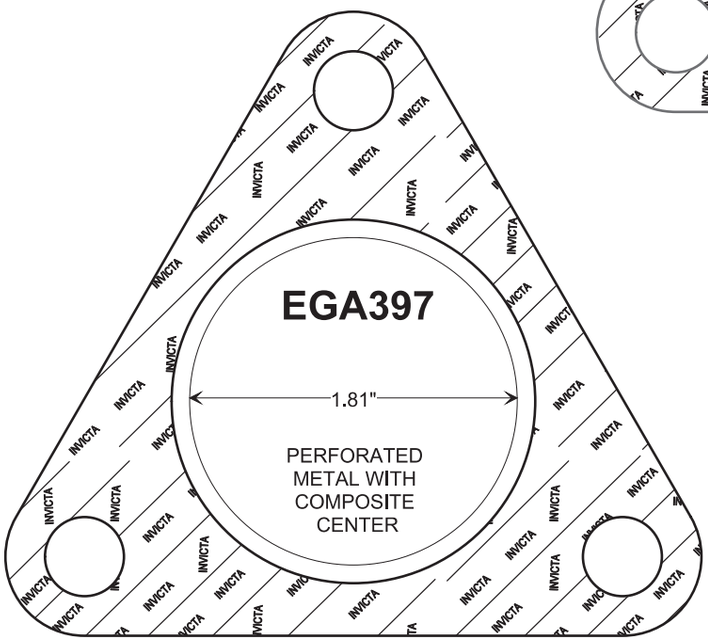

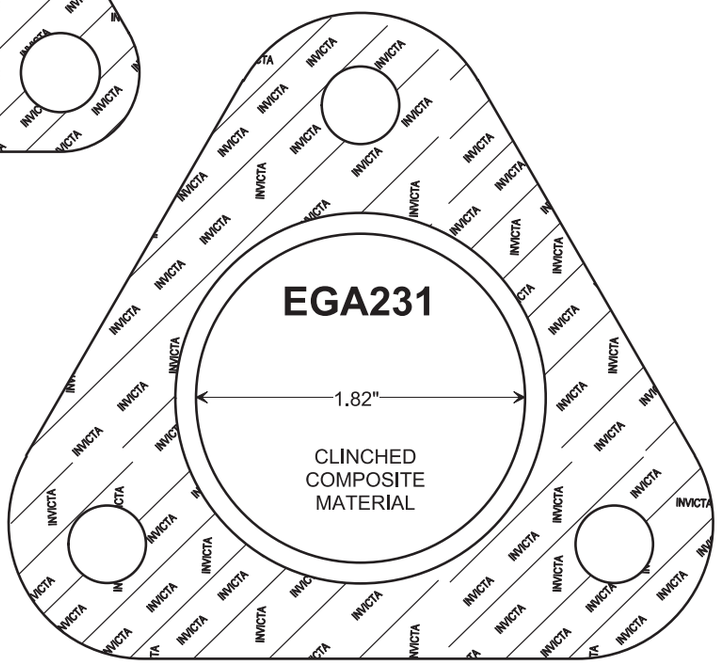

DESIGN STYLE 12

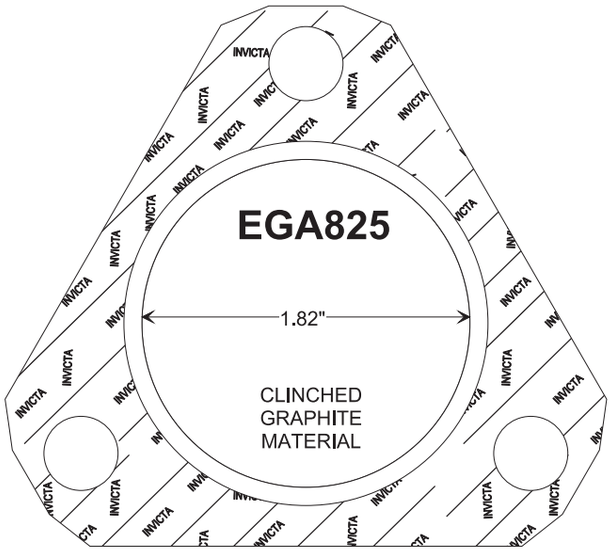

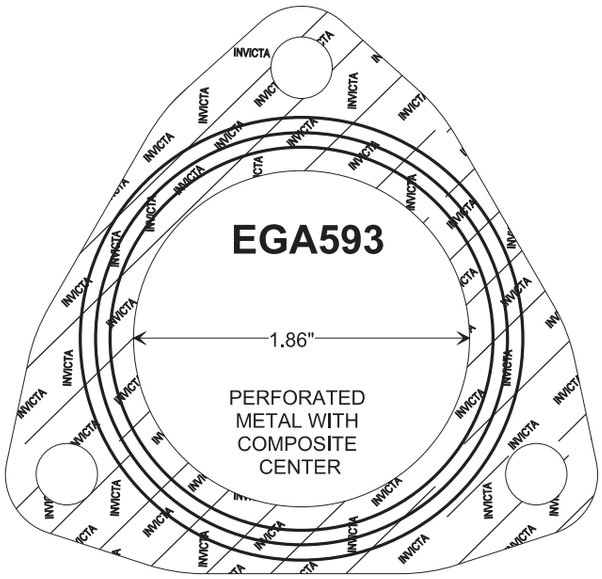

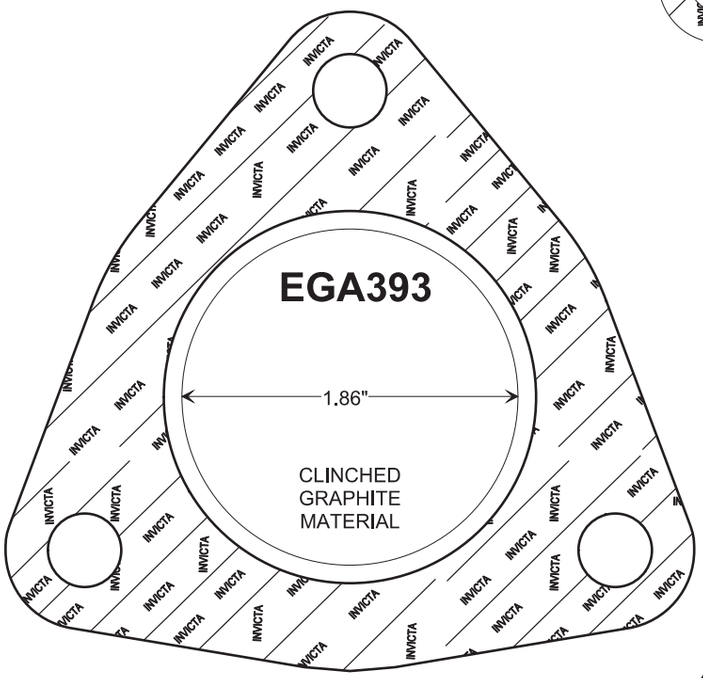

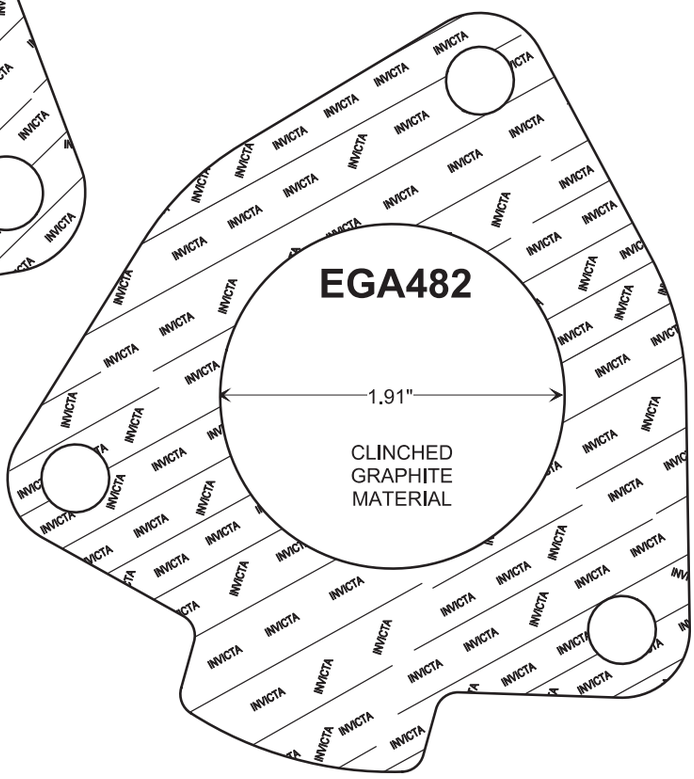

DESIGN STYLE 12

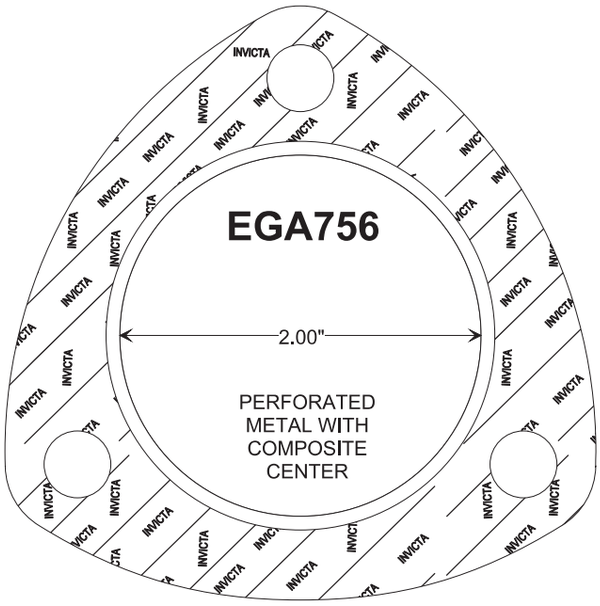

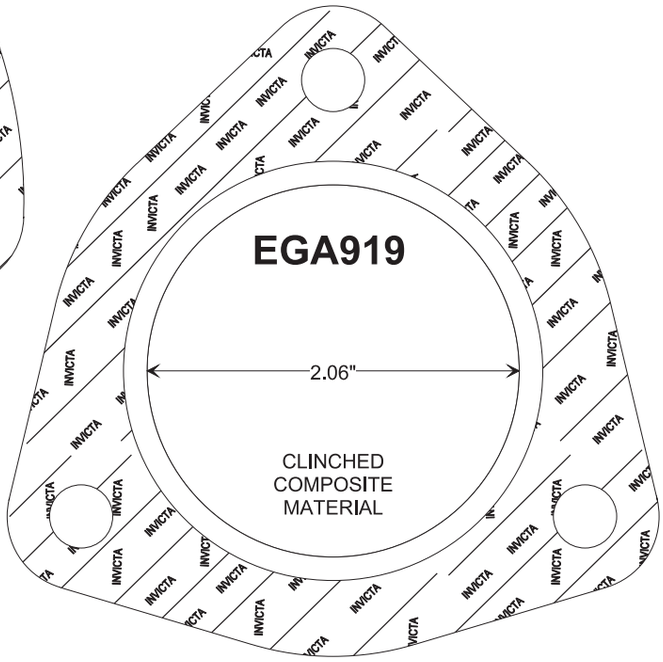

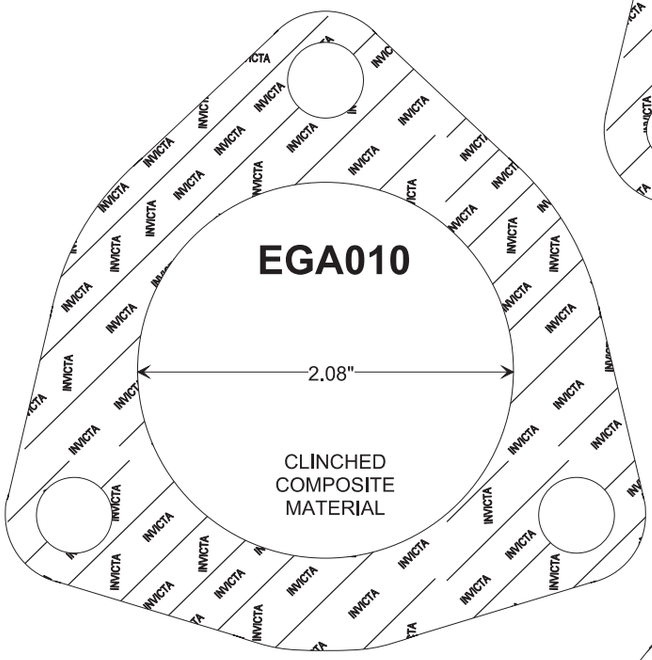

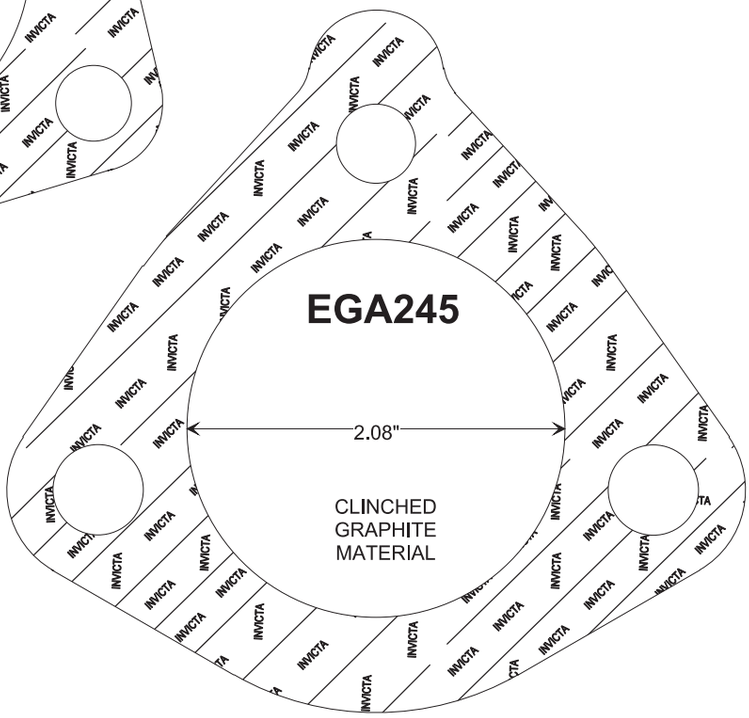

DESIGN STYLE 12

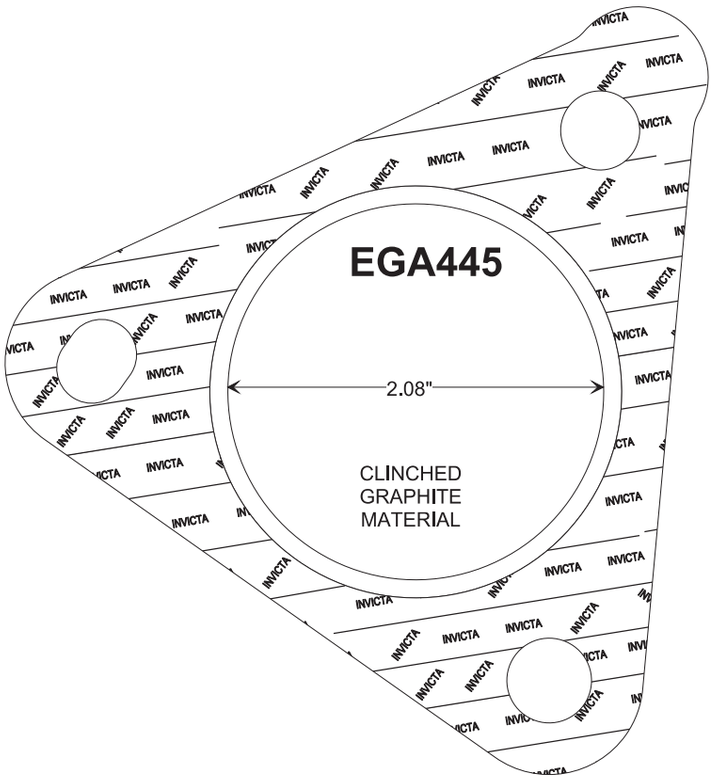

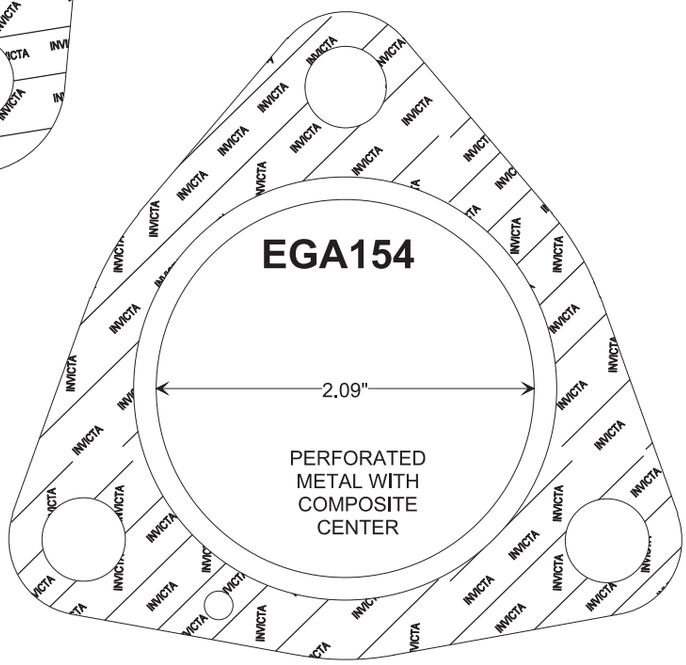

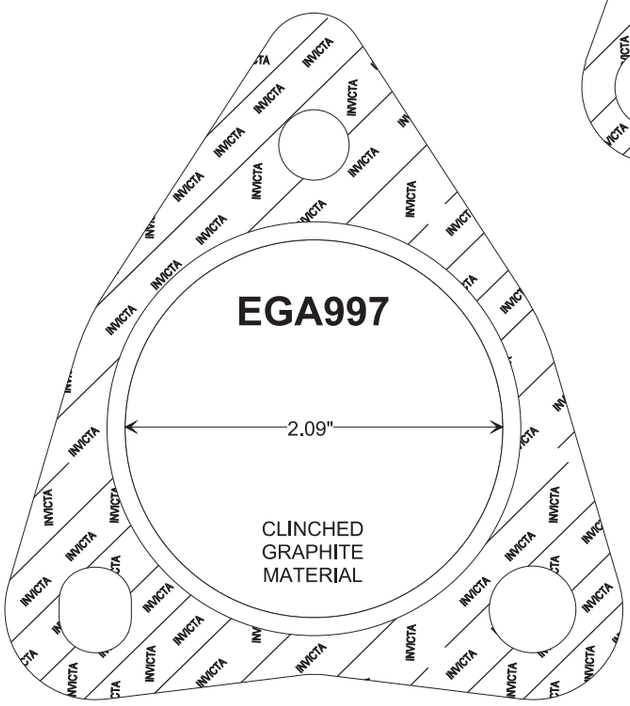

DESIGN STYLE 12

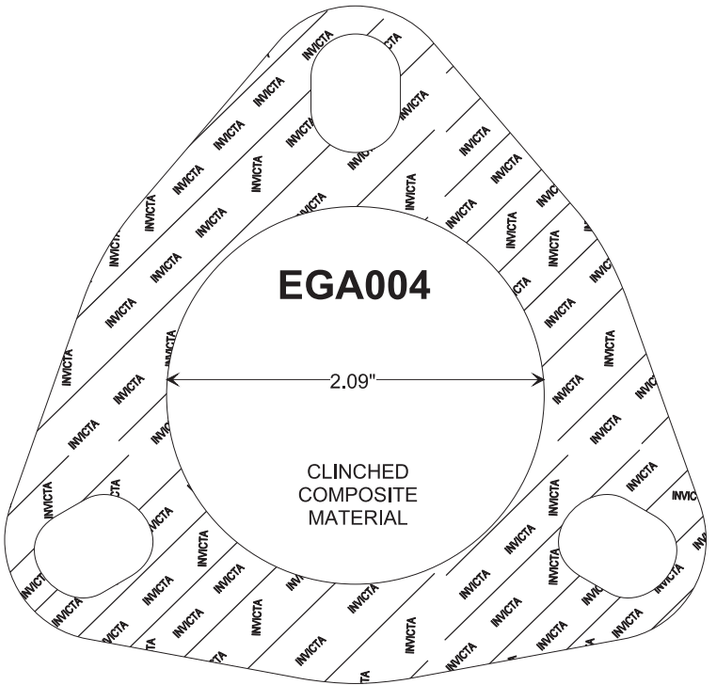

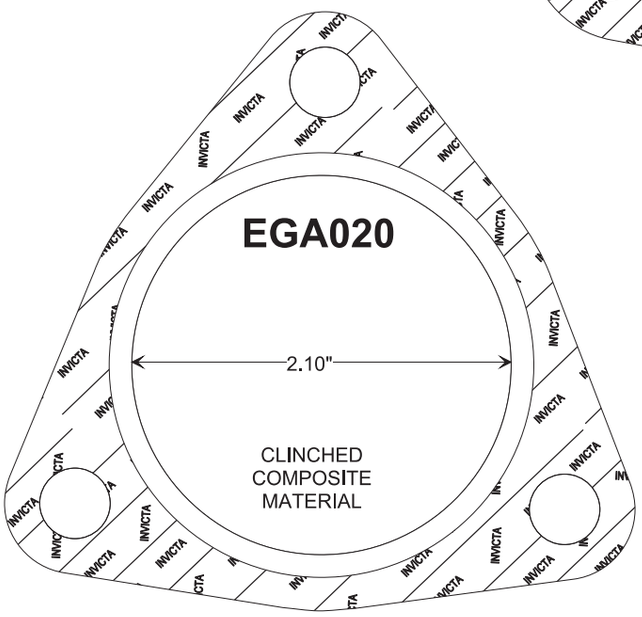

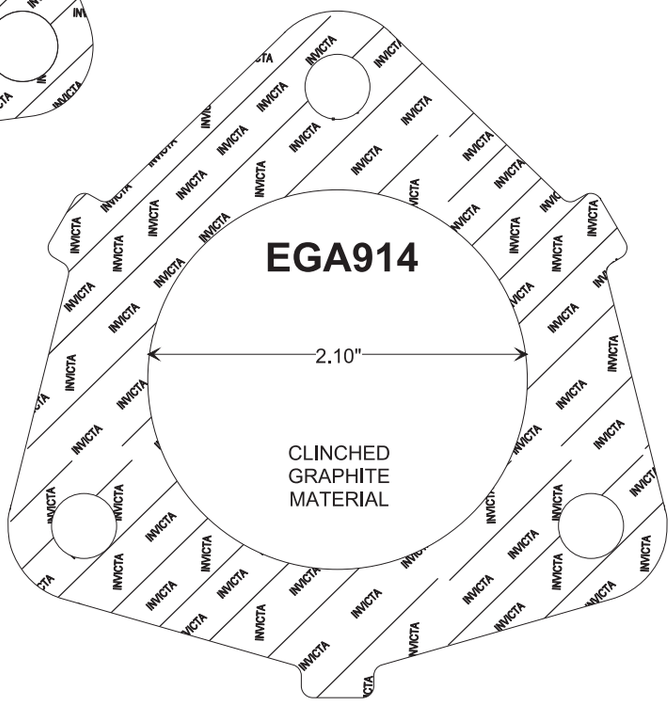

DESIGN STYLE 12

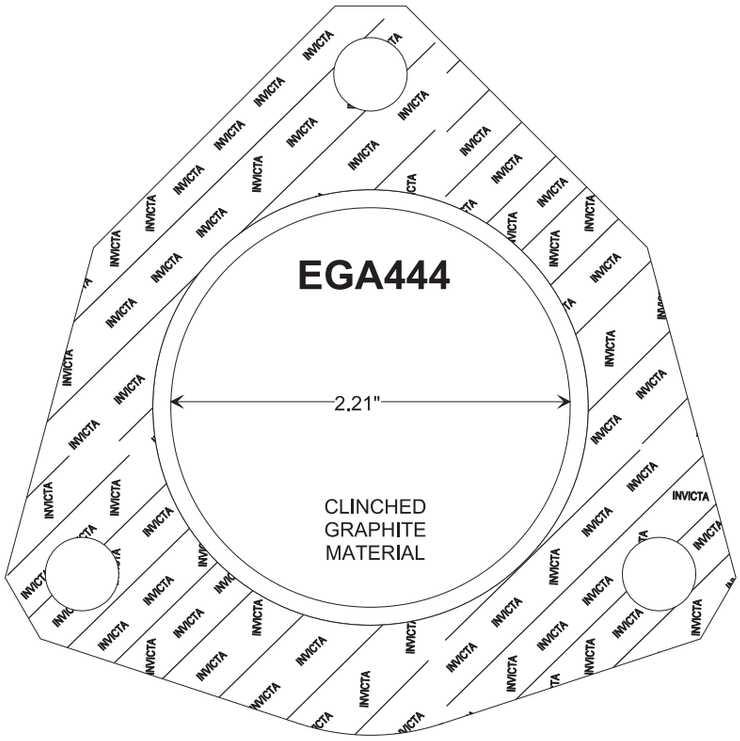

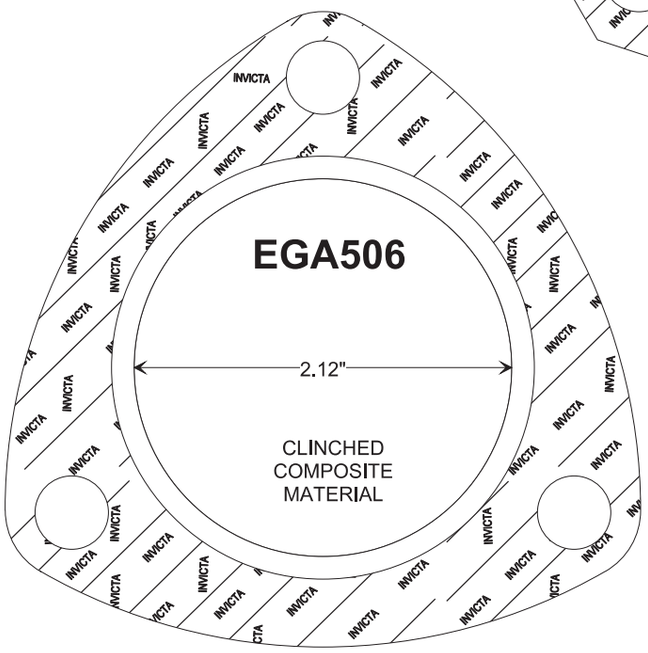

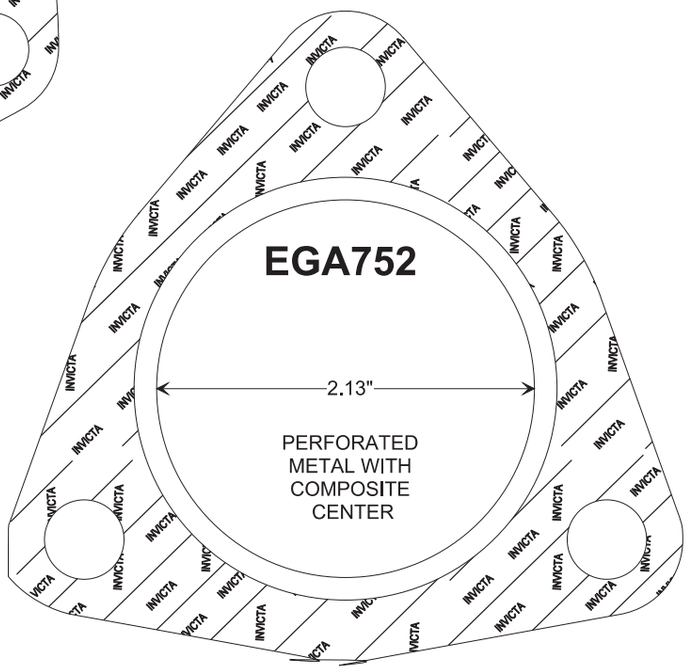

DESIGN STYLE 12

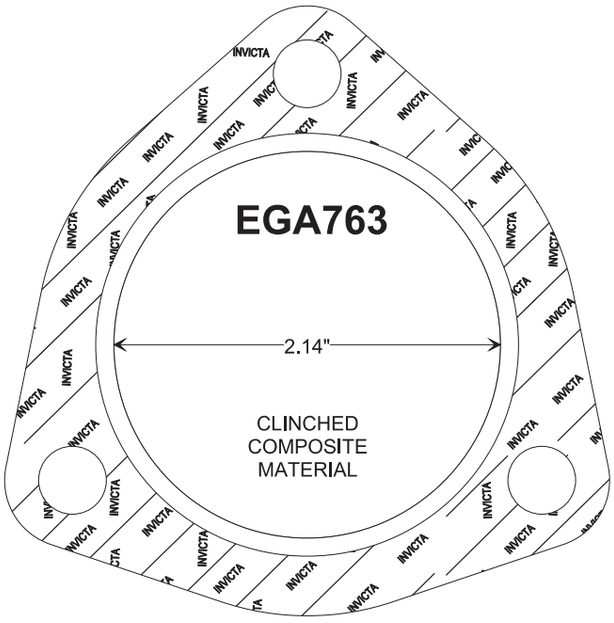

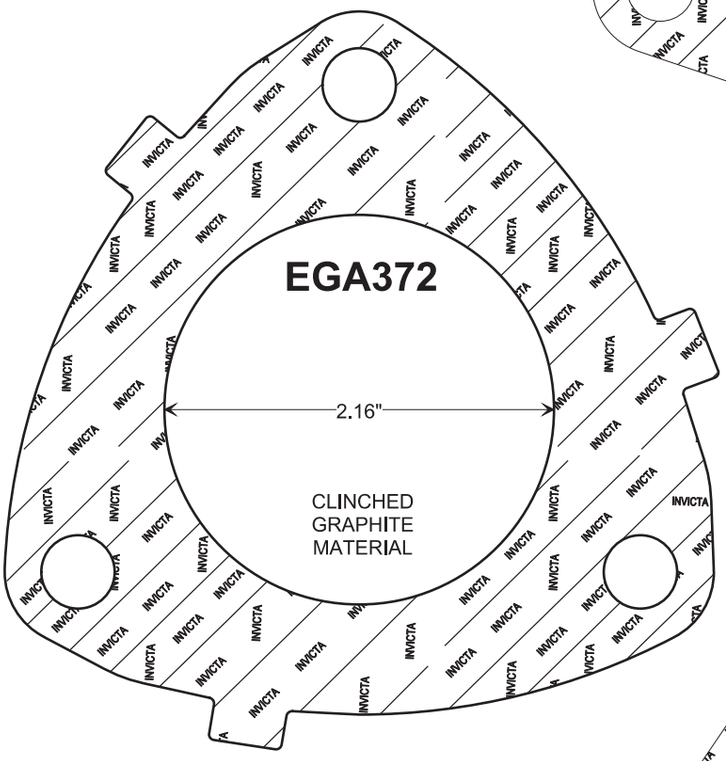

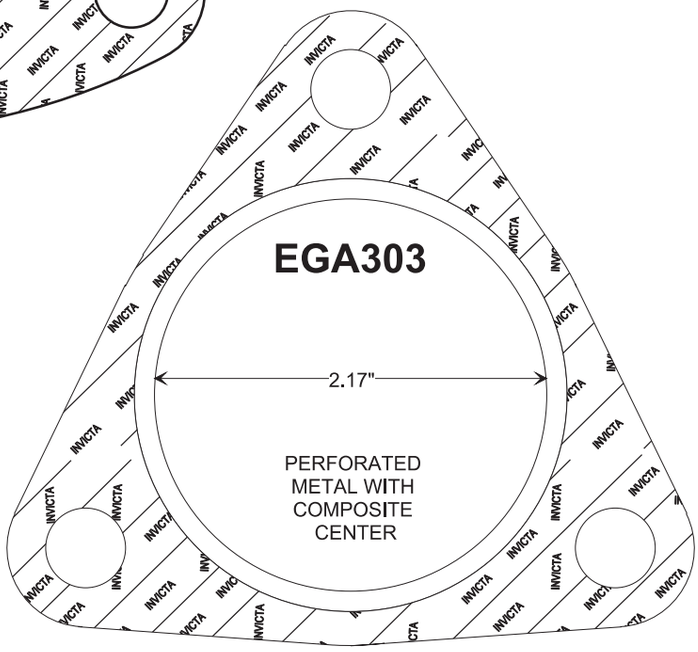

DESIGN STYLE 12

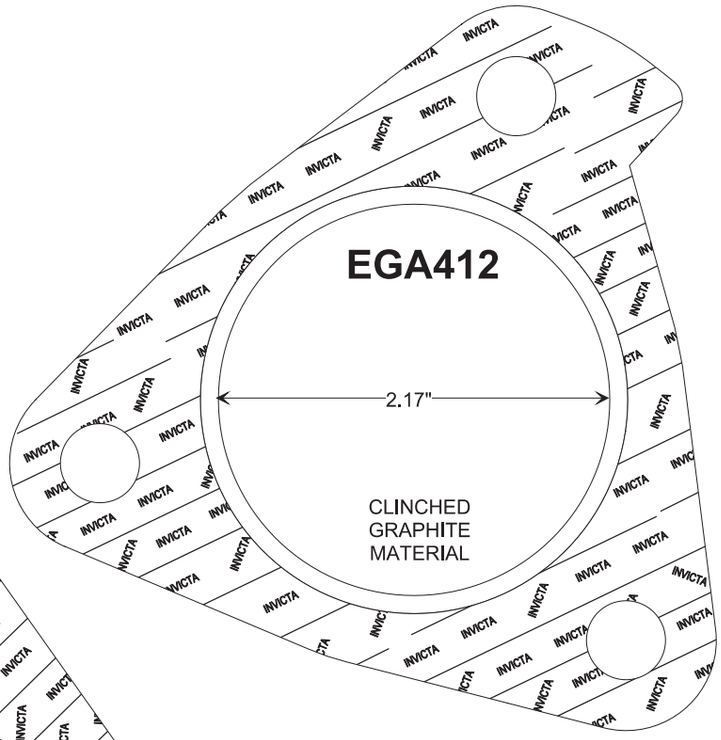

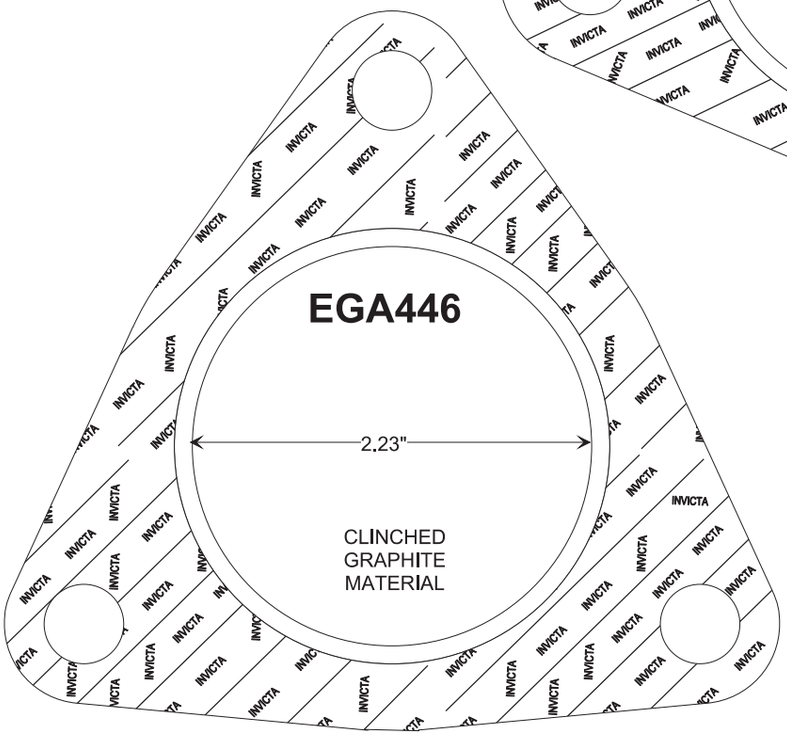

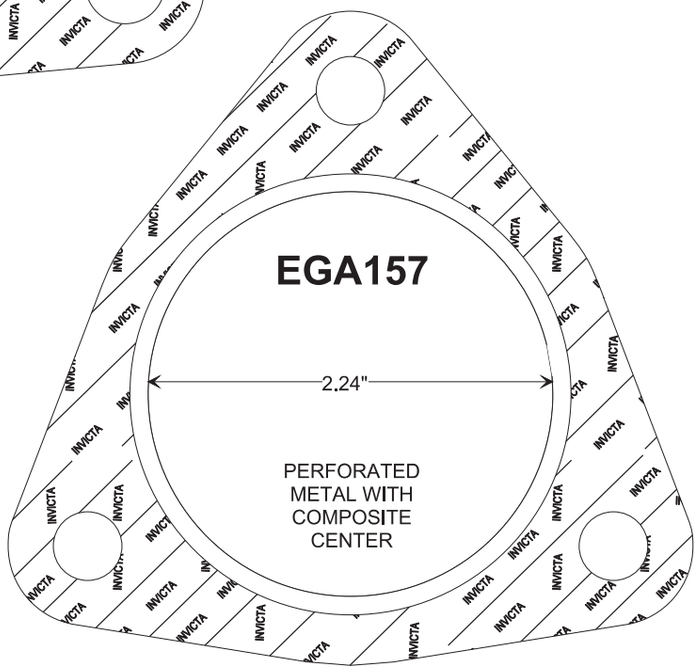

DESIGN STYLE 12

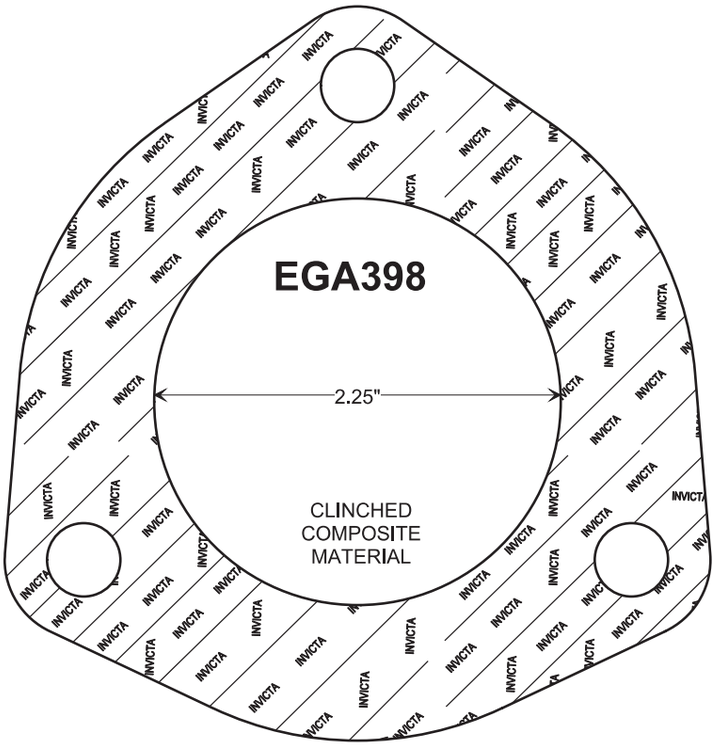

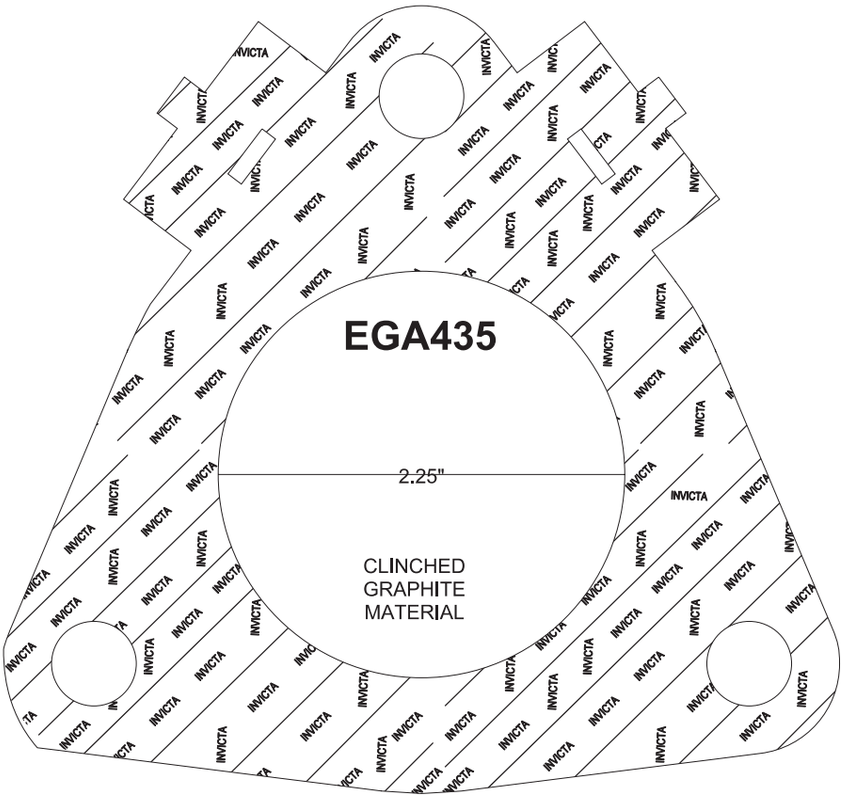

DESIGN STYLE 12

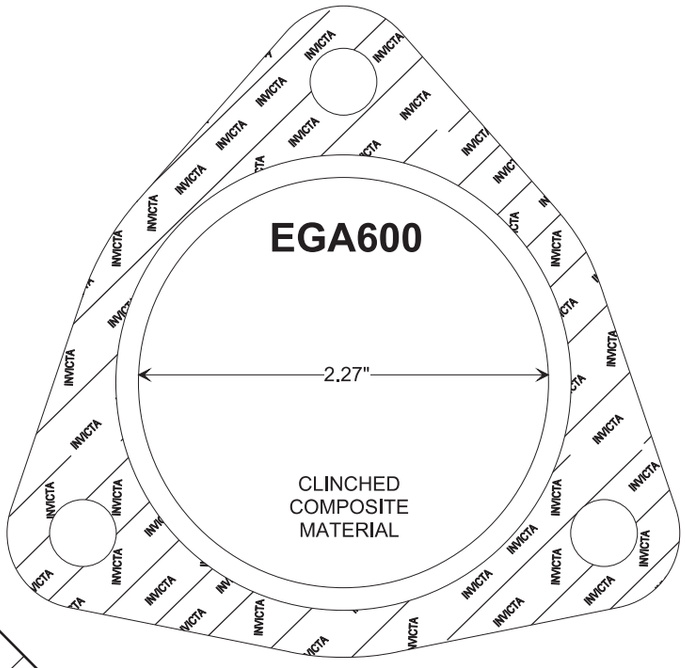

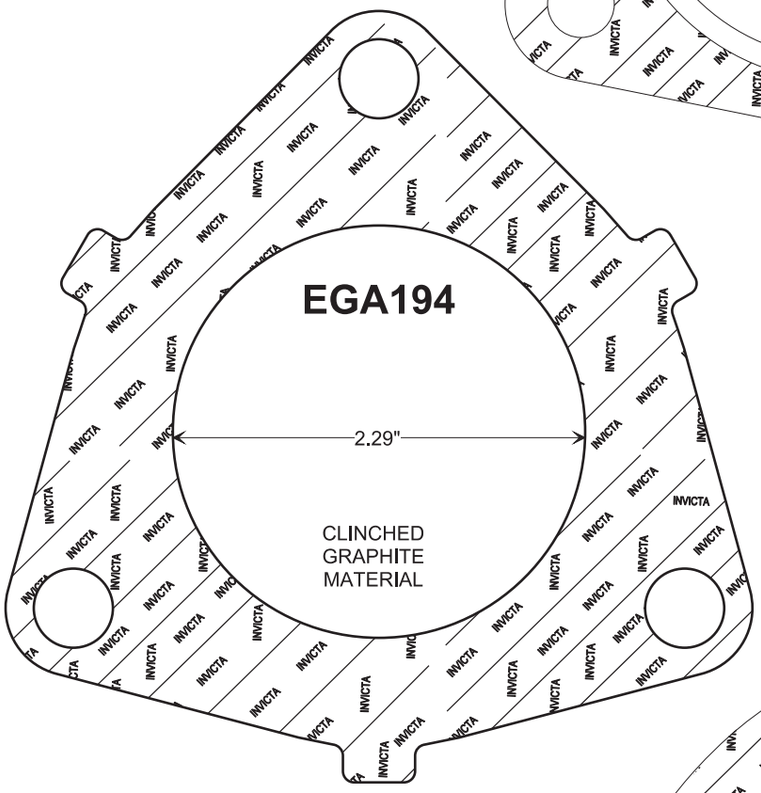

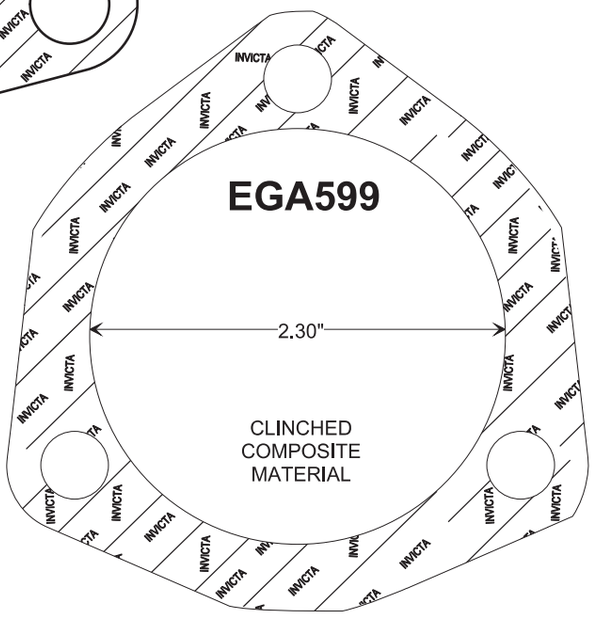

DESIGN STYLE 12

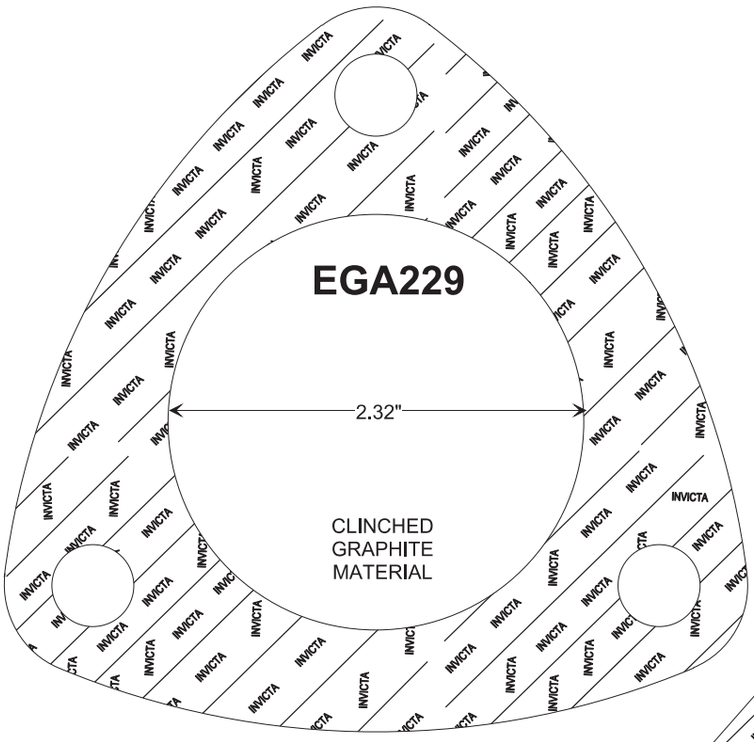

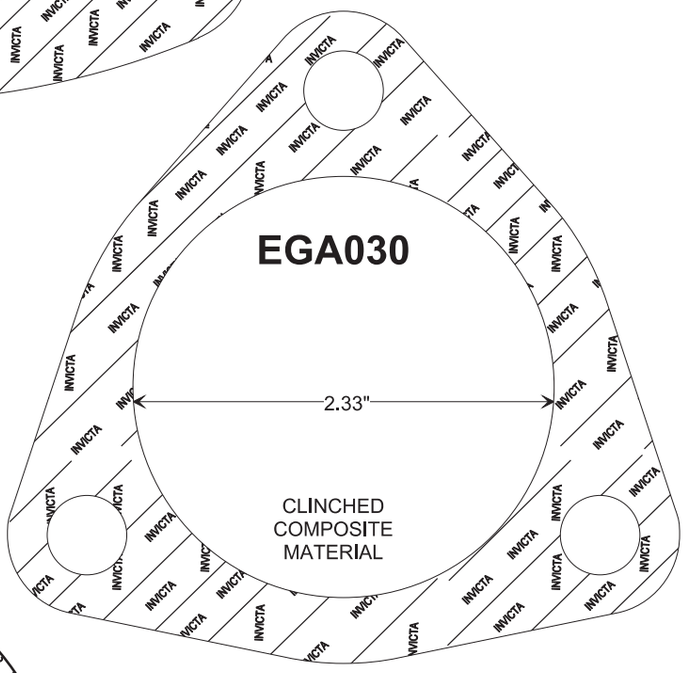

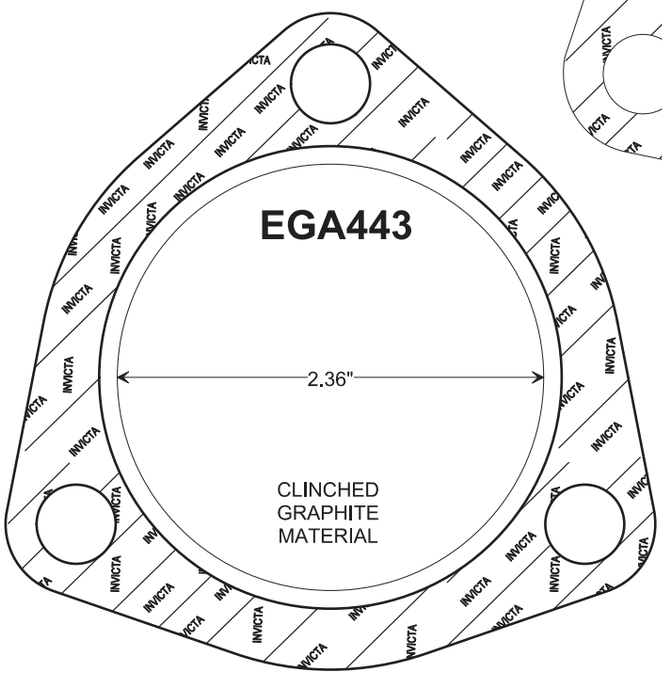

DESIGN STYLE 12

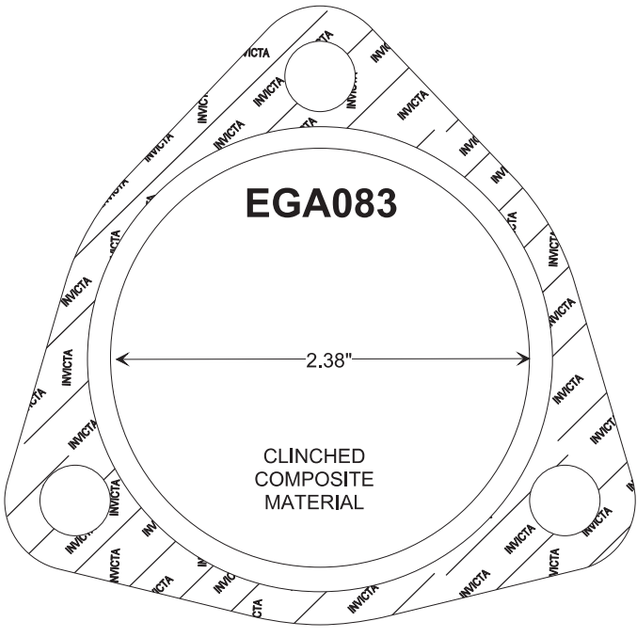

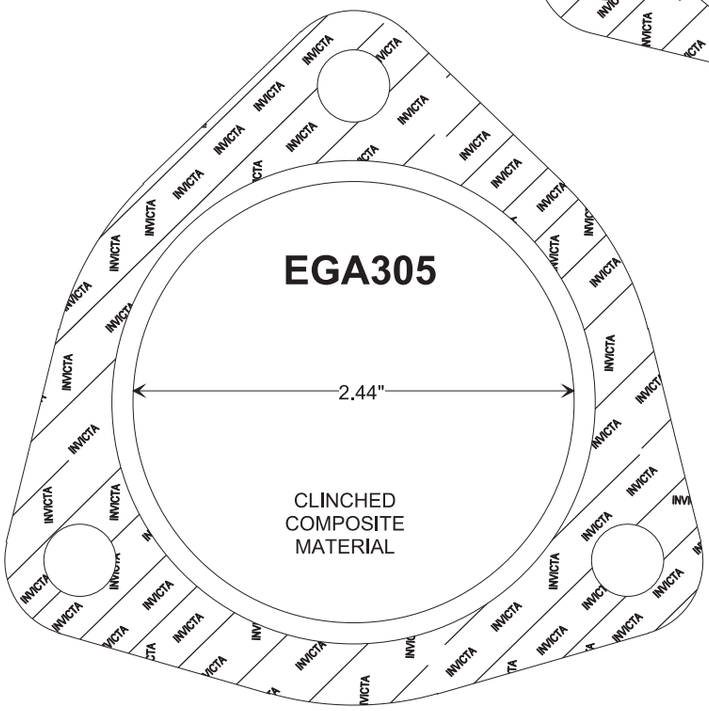

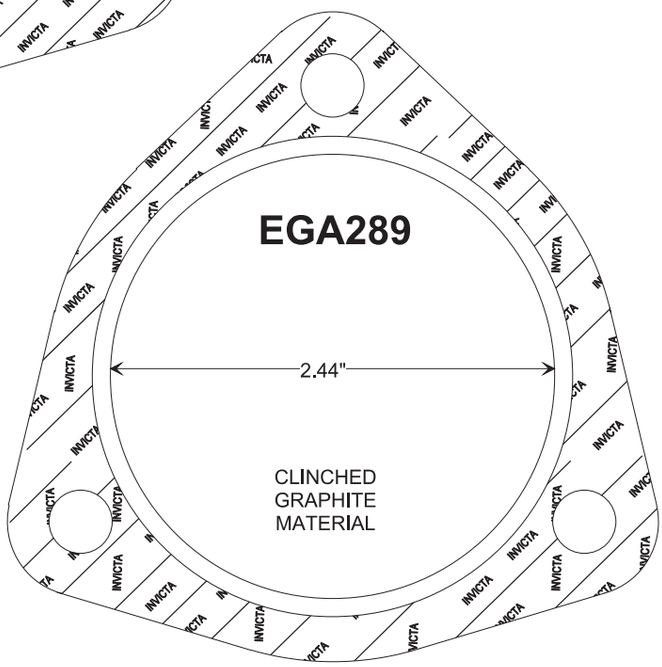

DESIGN STYLE 12

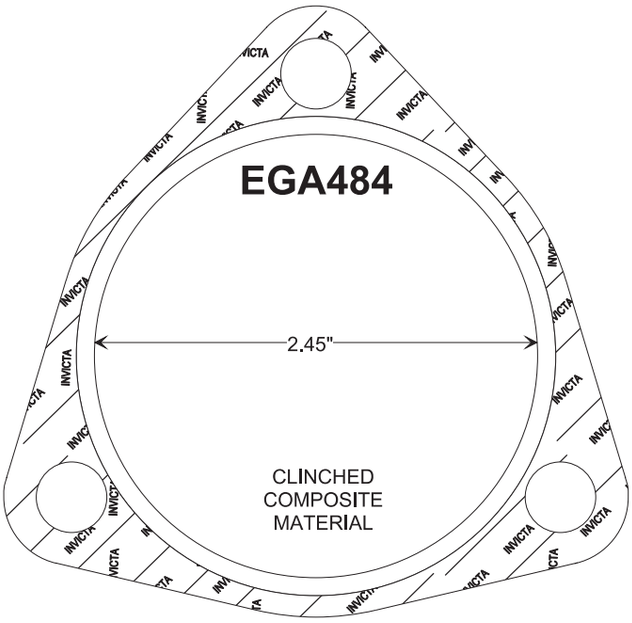

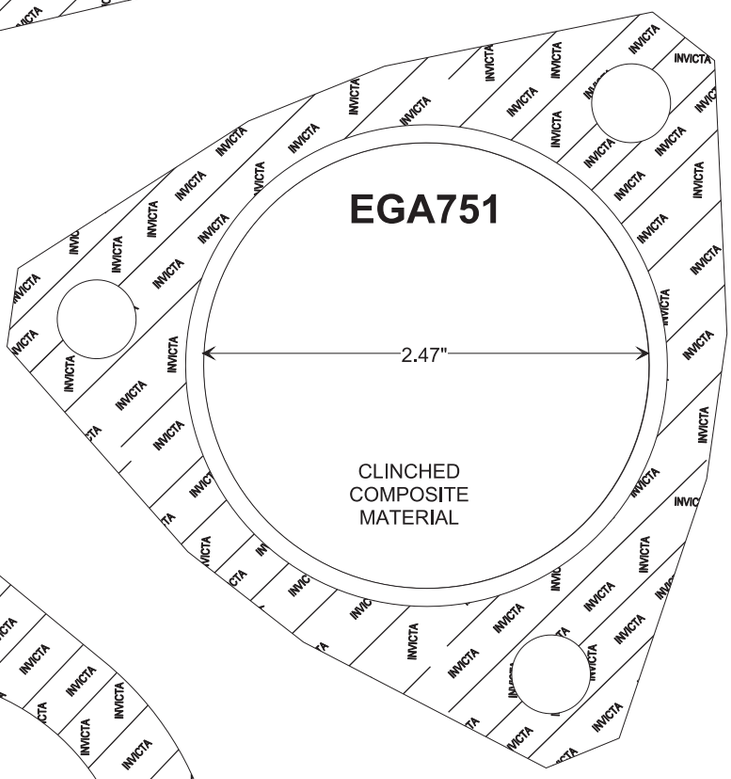

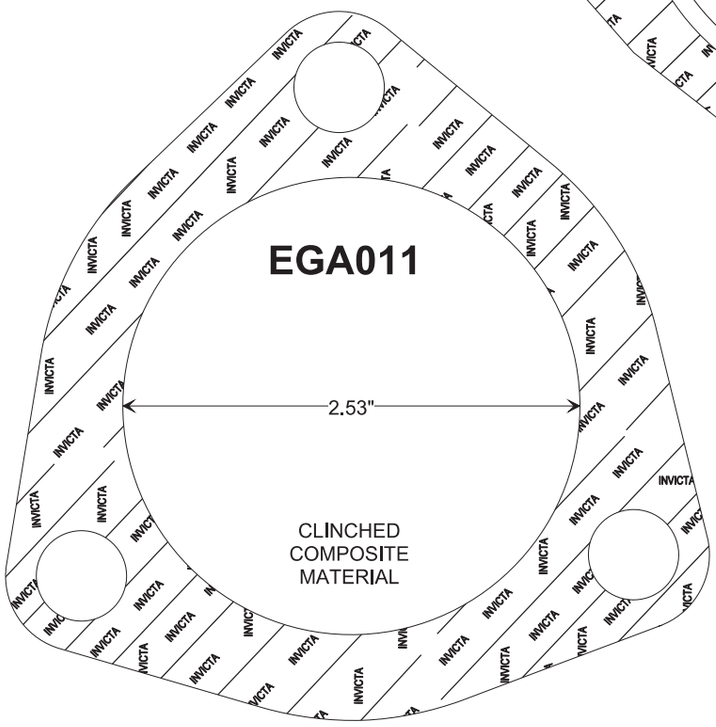

DESIGN STYLE 12

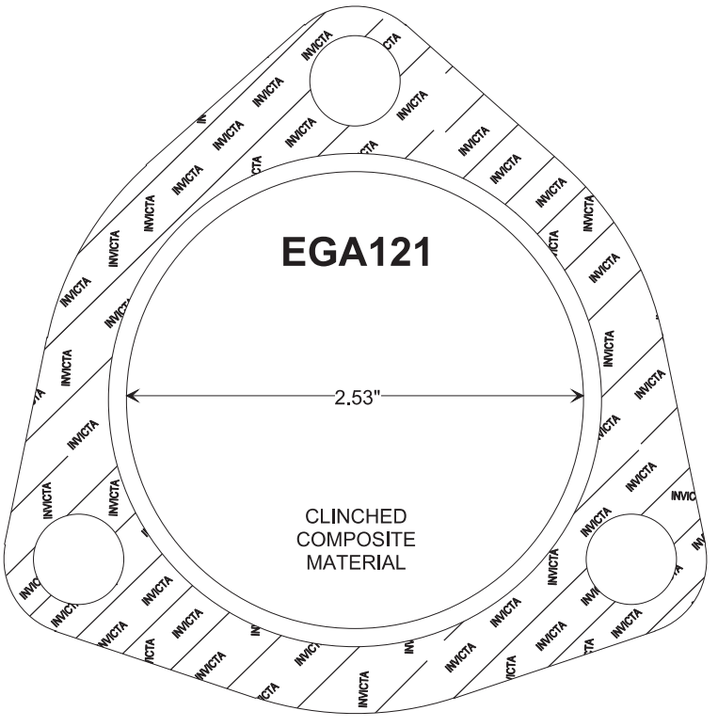

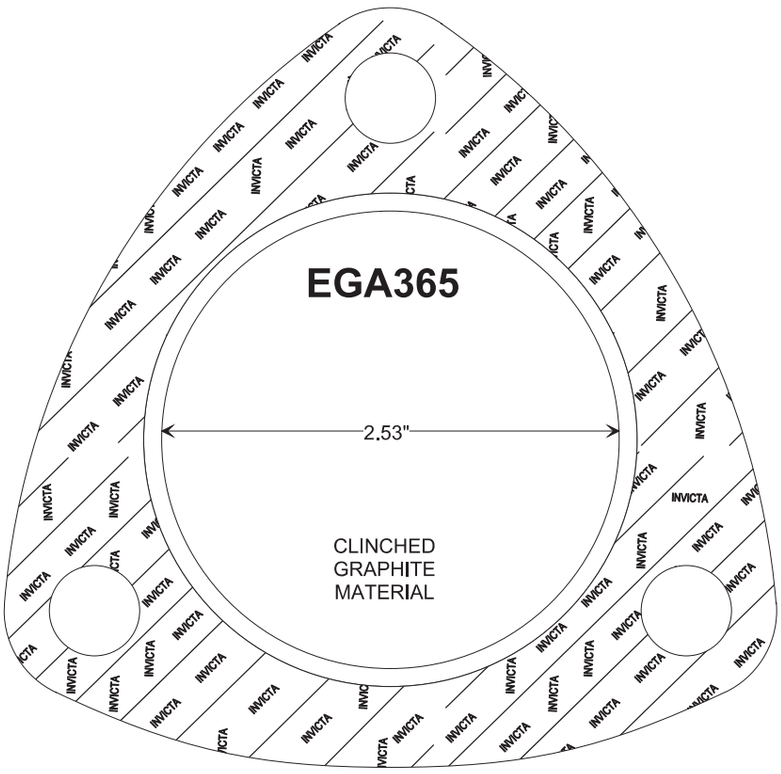

DESIGN STYLE 12

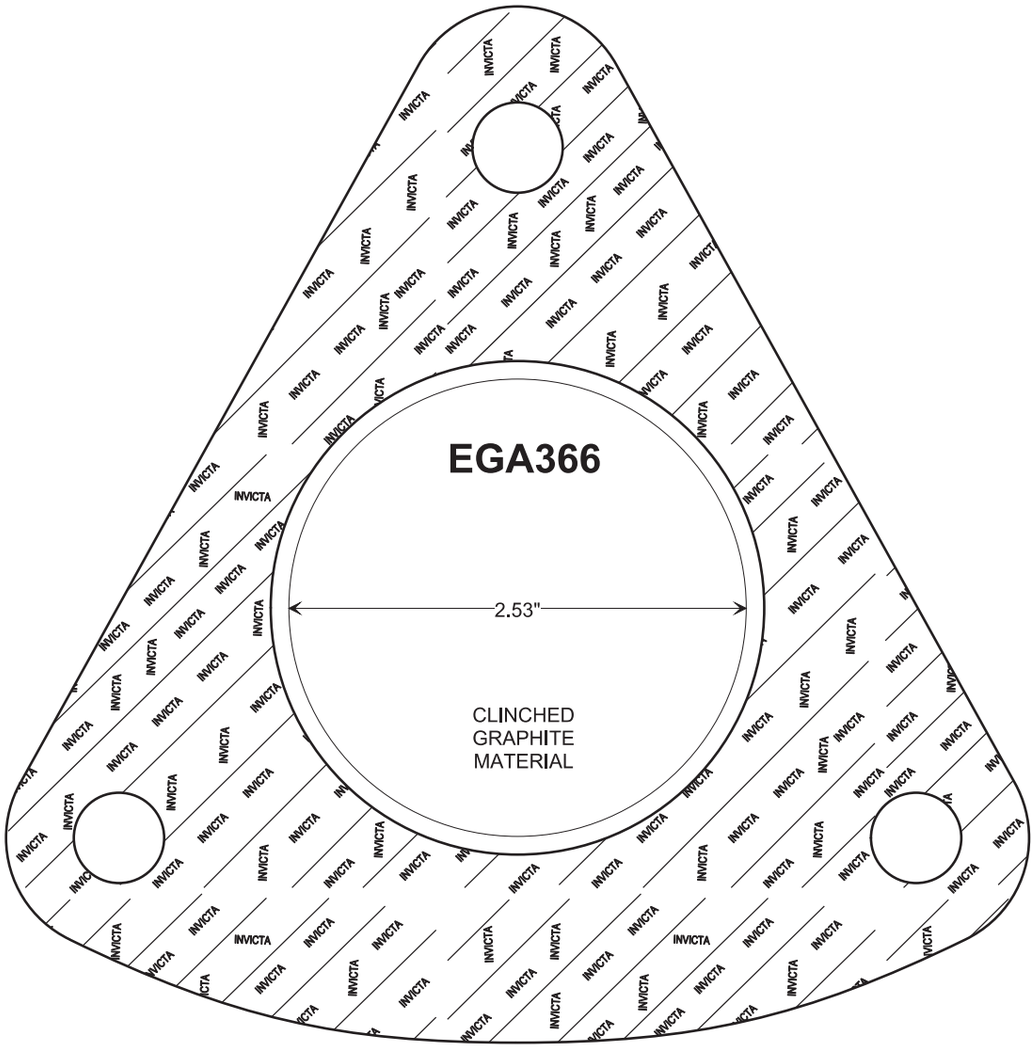

DESIGN STYLE 12

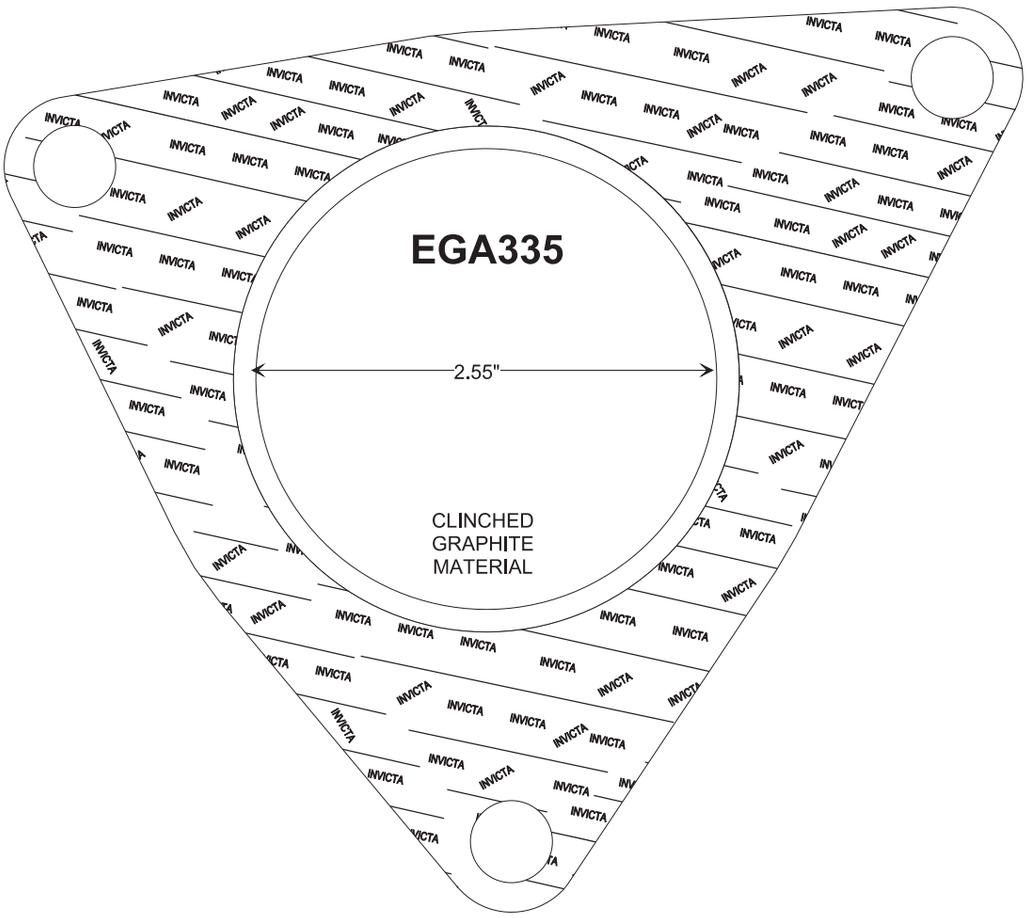

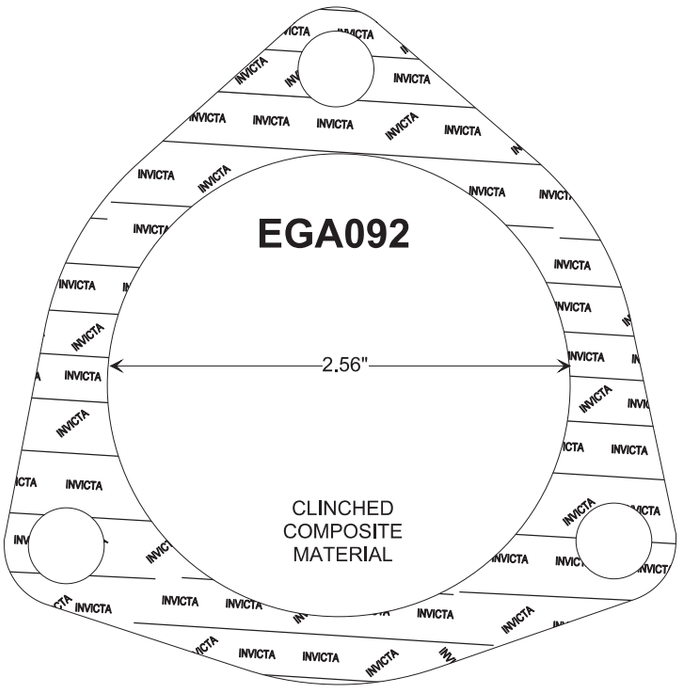

DESIGN STYLE 12

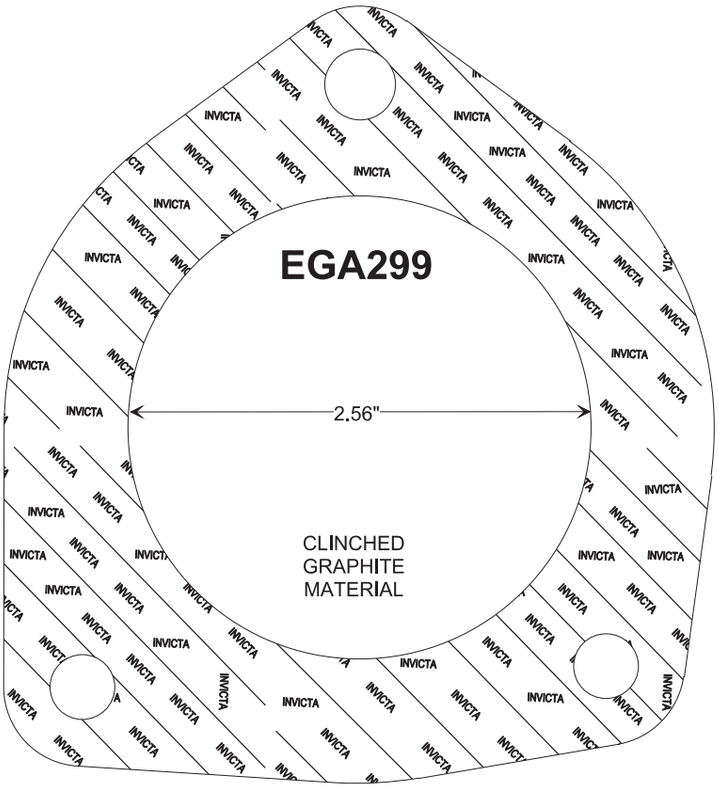

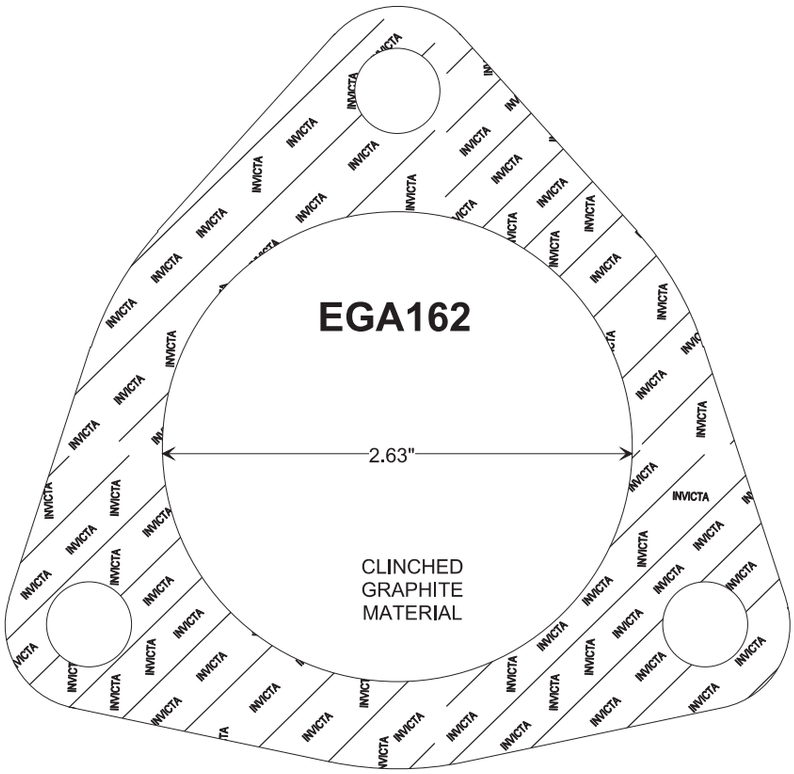

DESIGN STYLE 12

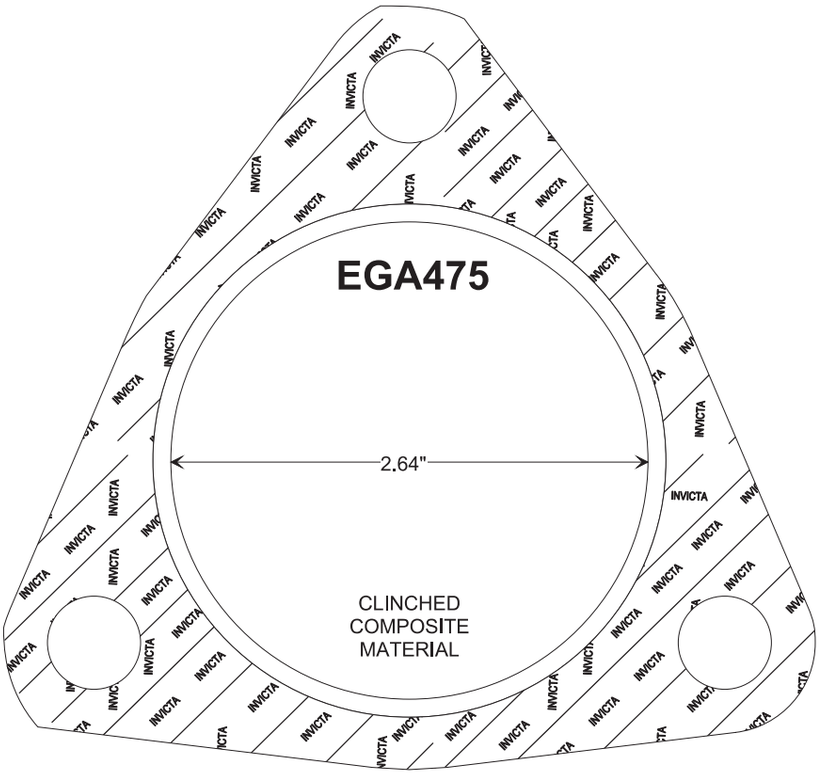

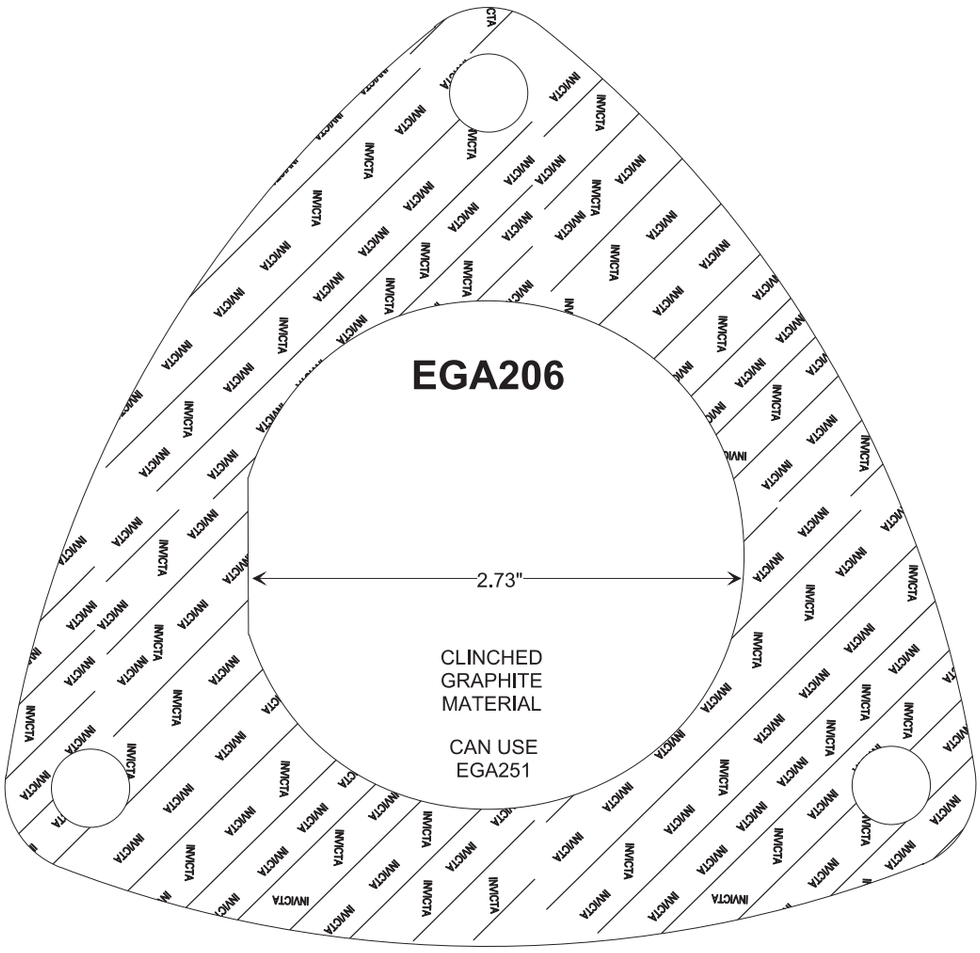

DESIGN STYLE 12

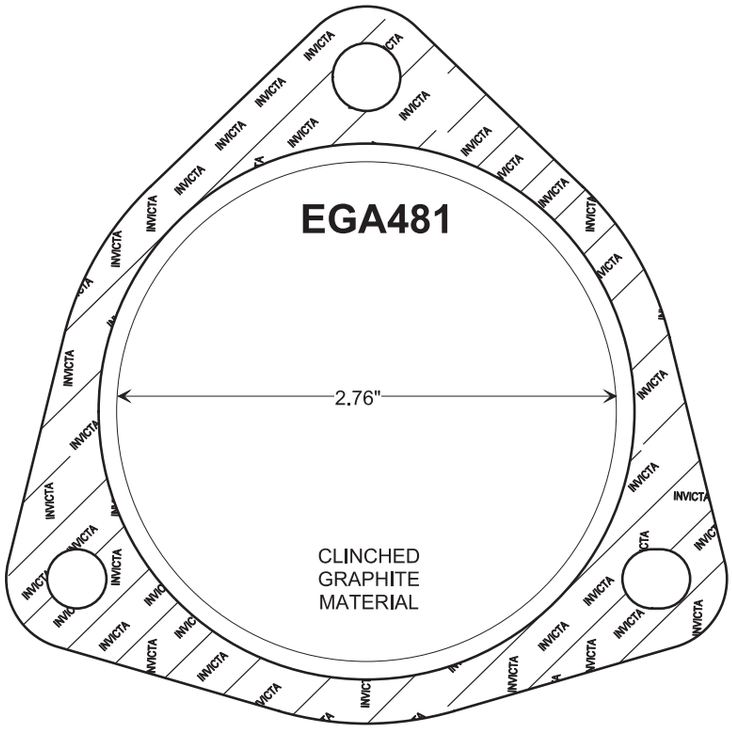

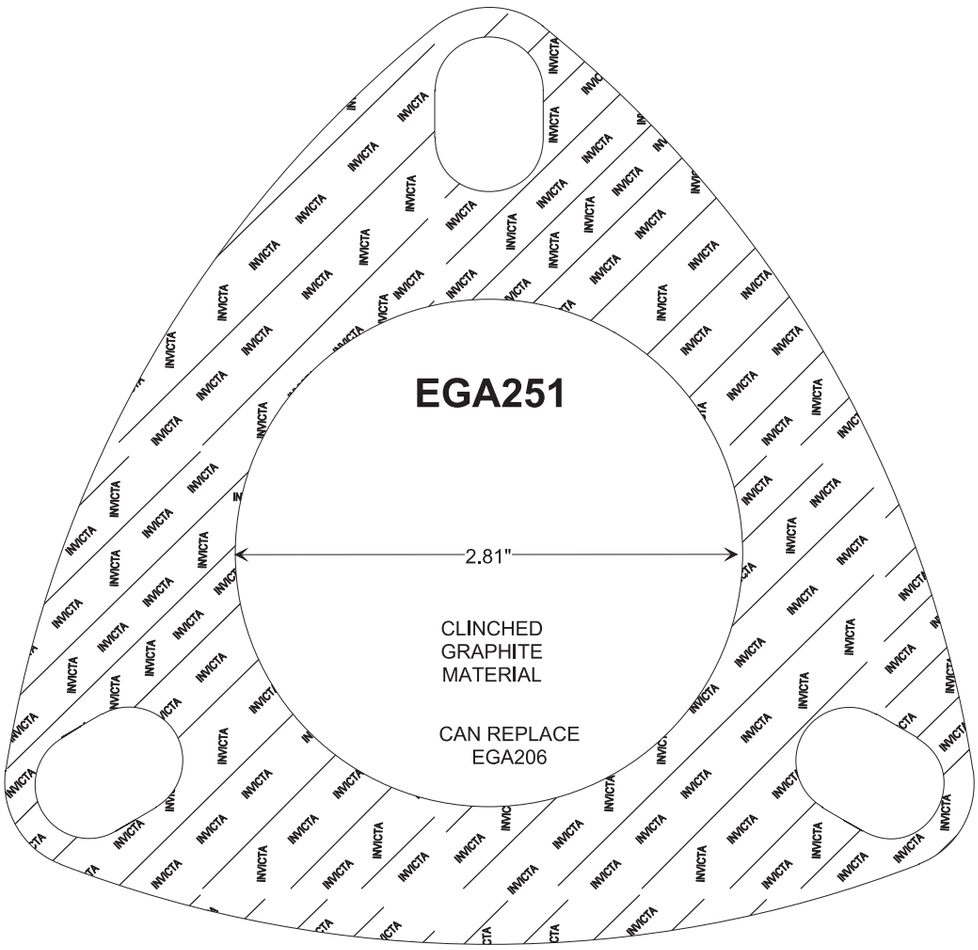

DESIGN STYLE 12

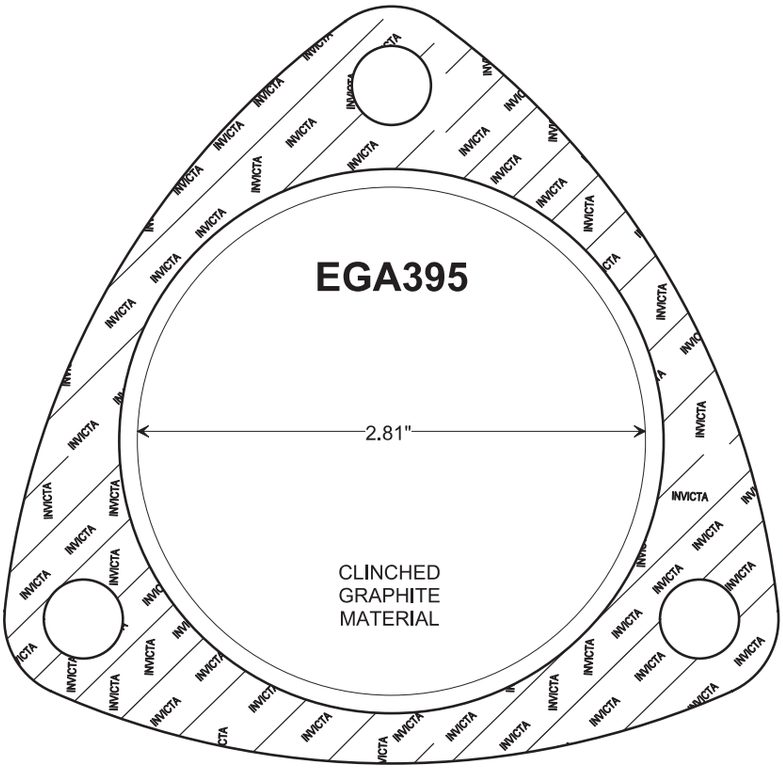

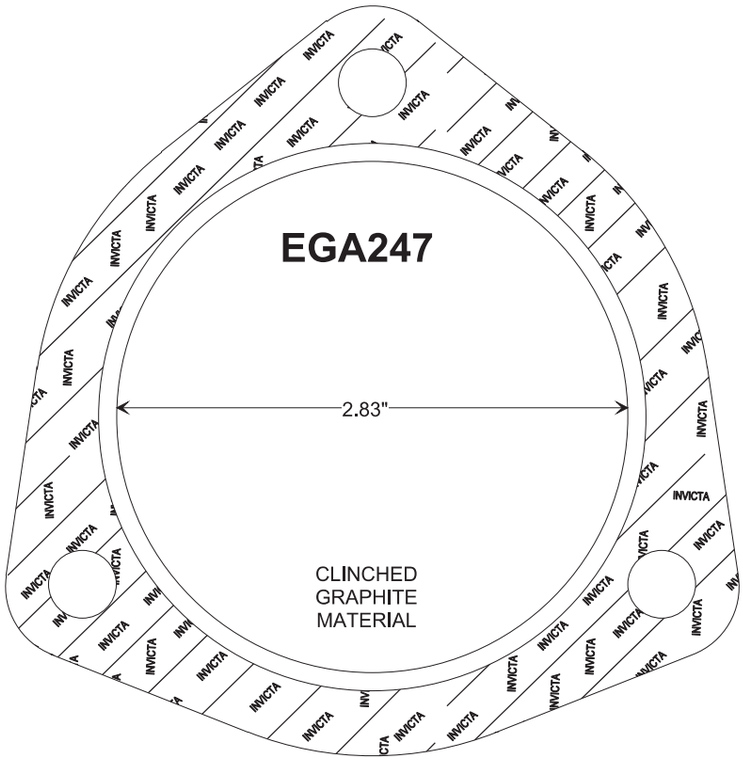

DESIGN STYLE 12

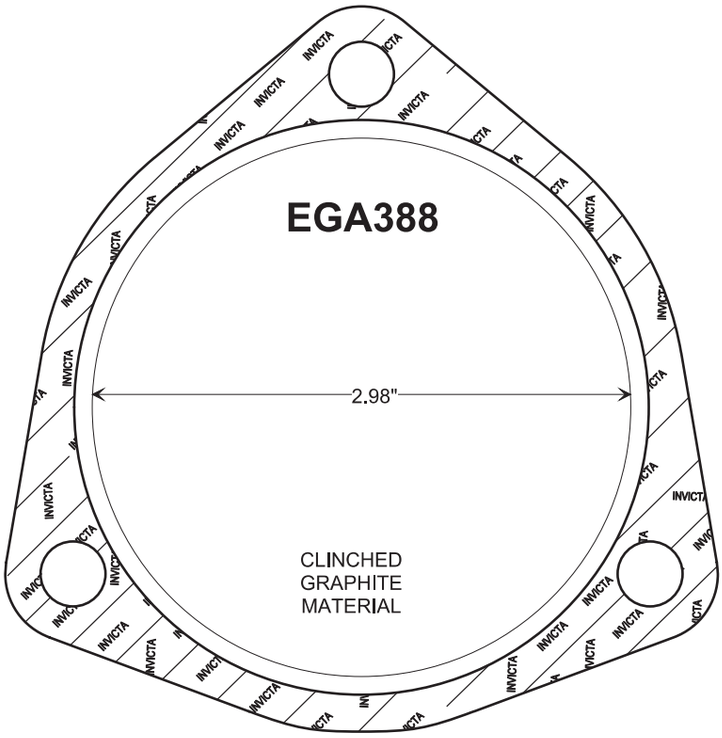

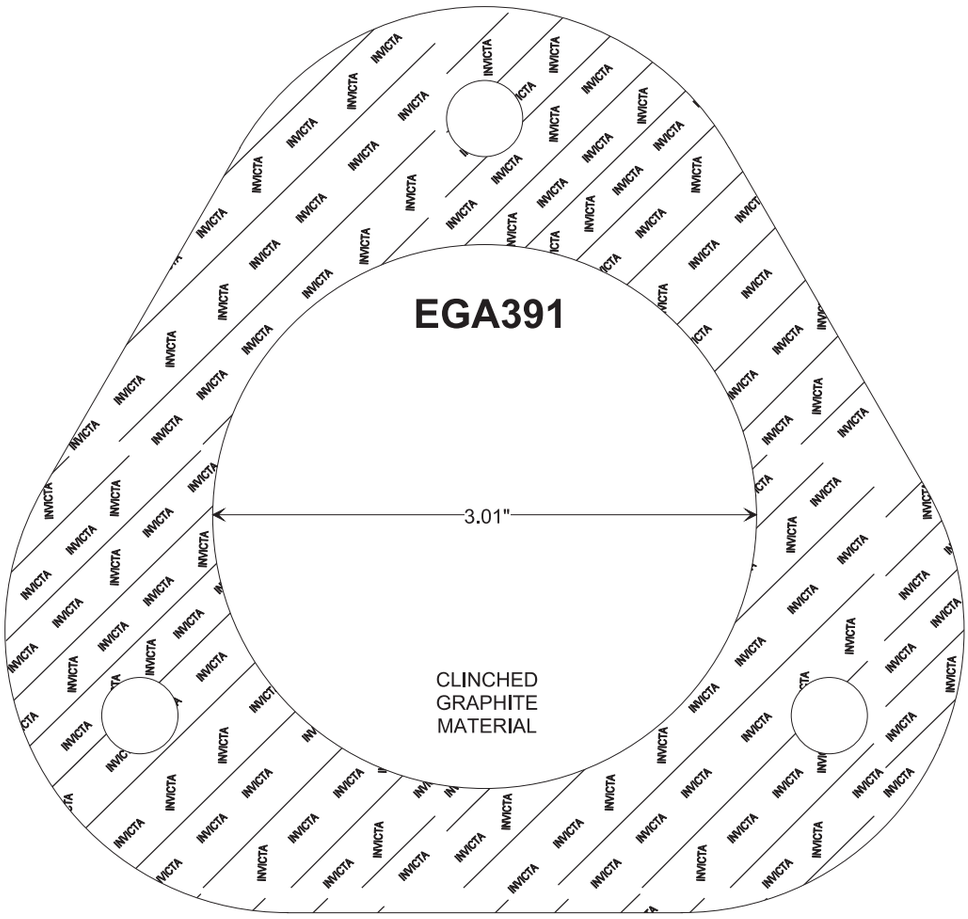

DESIGN STYLE 12

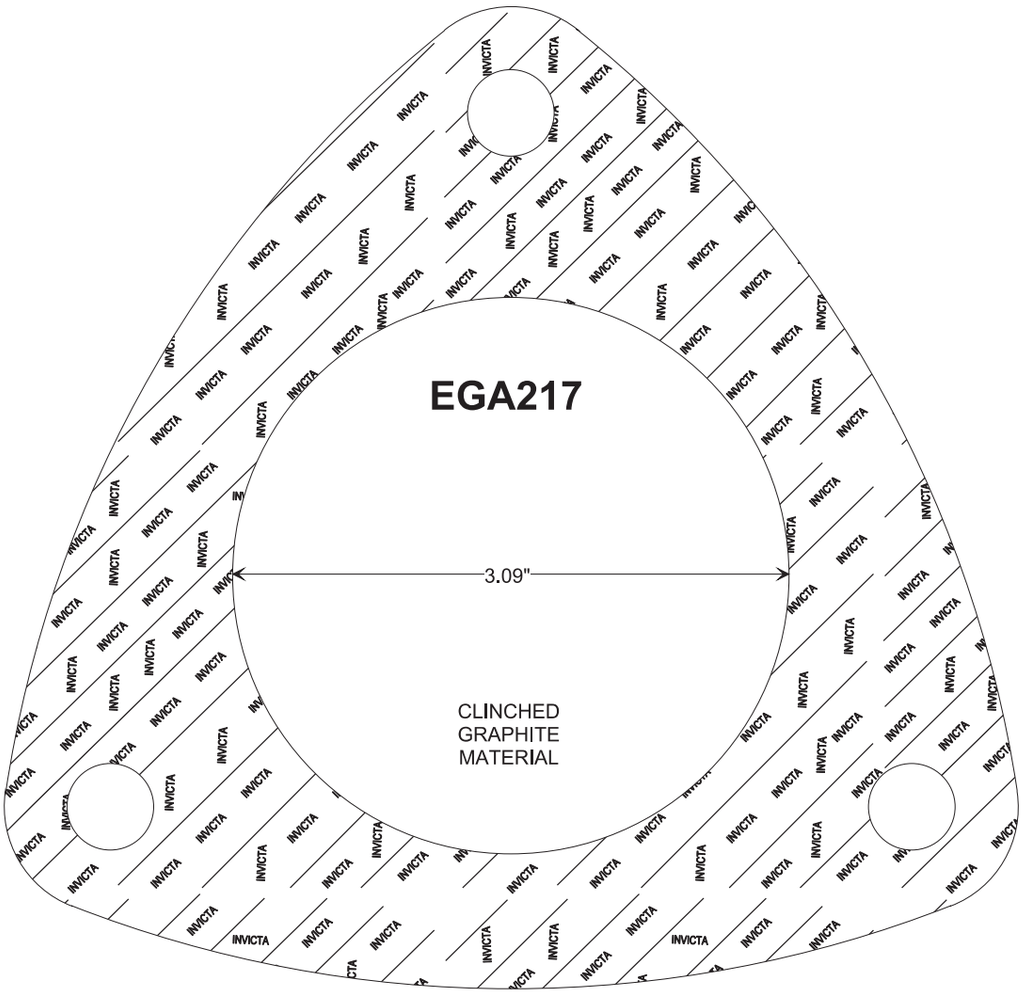

DESIGN STYLE 12

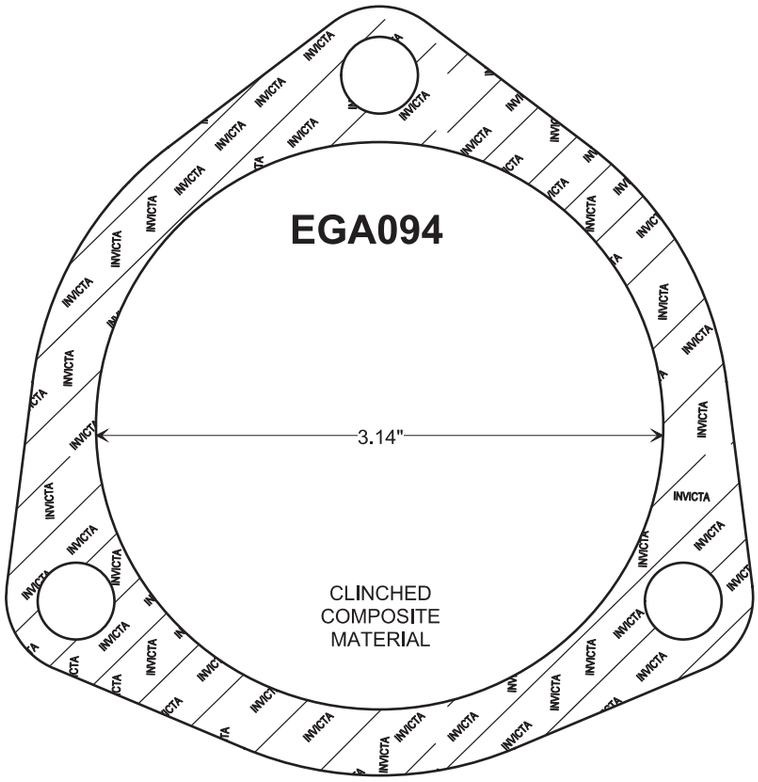

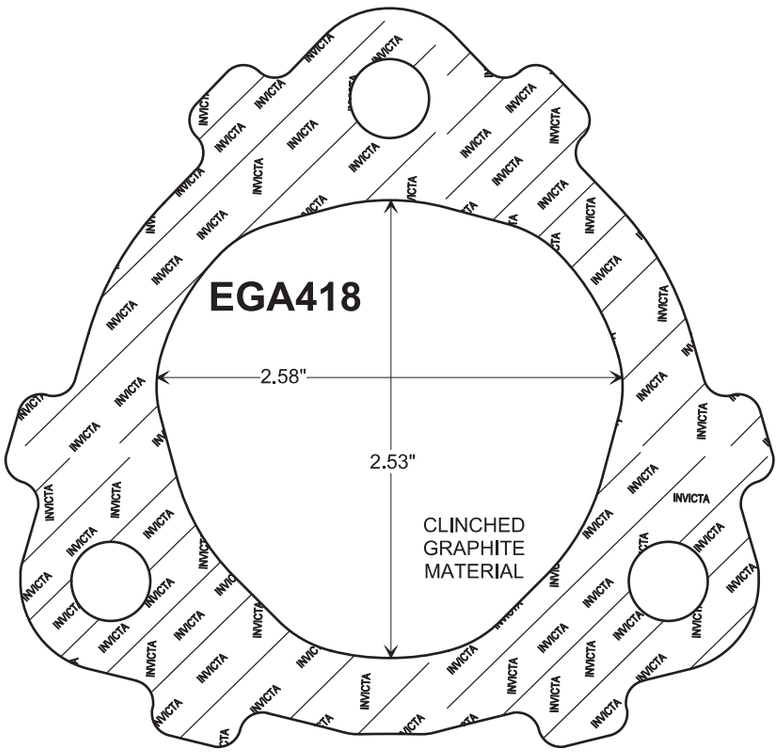

DESIGN STYLE 13

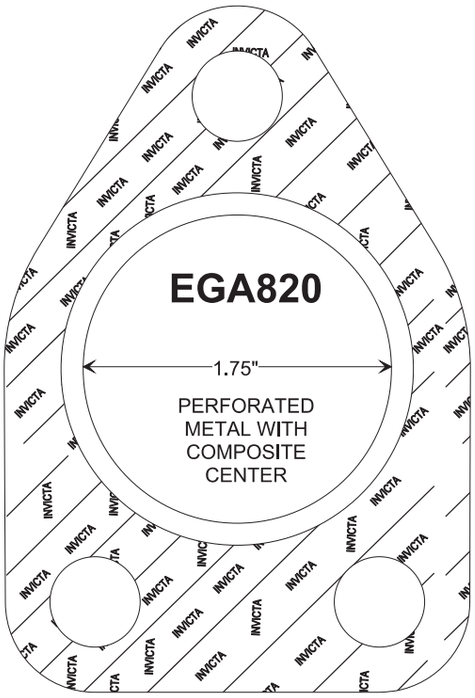

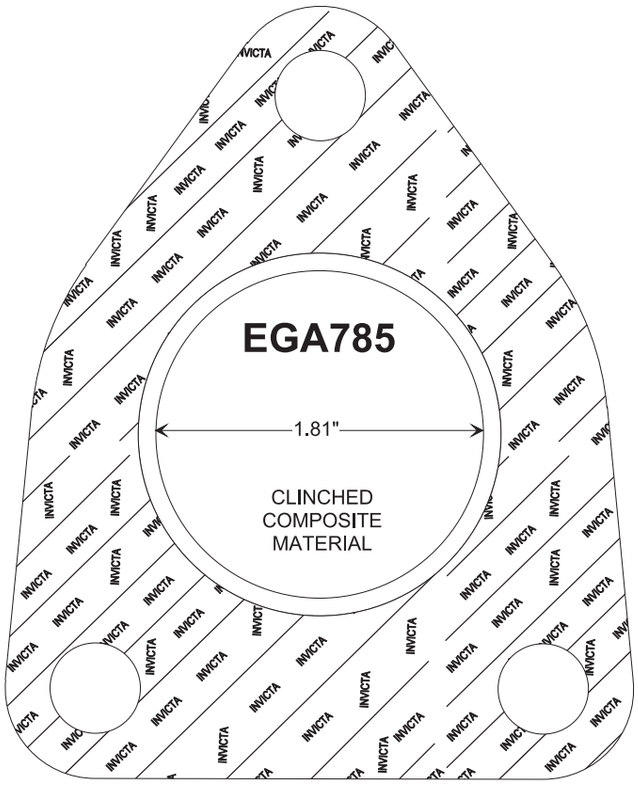

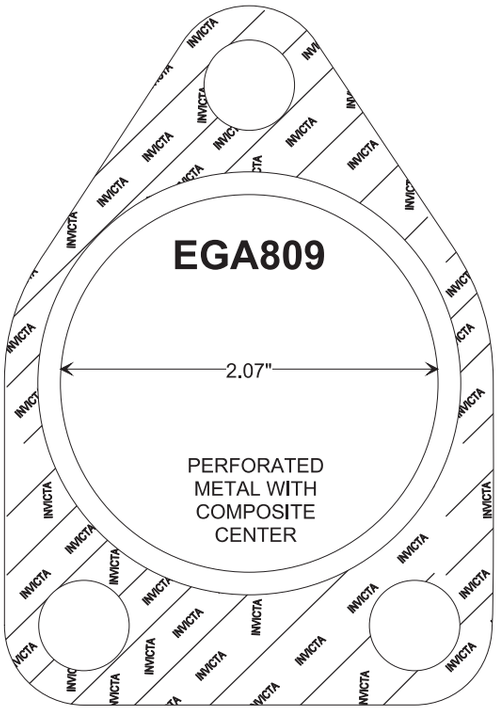

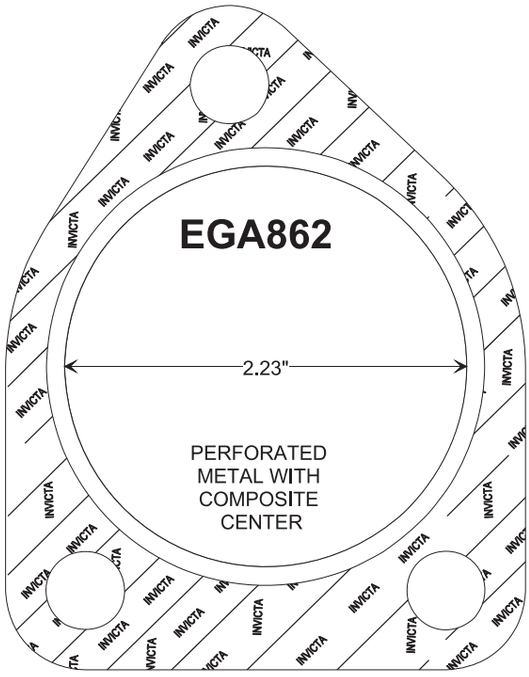

DESIGN STYLE 13

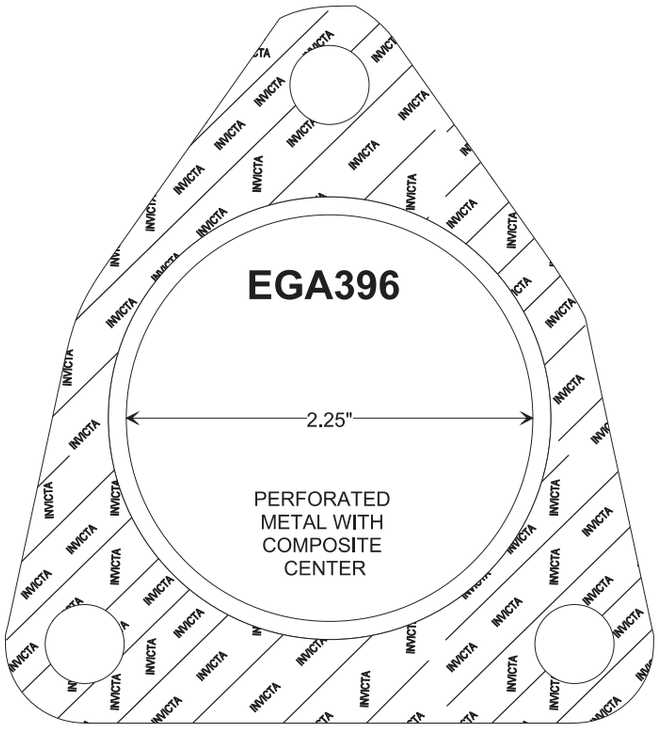

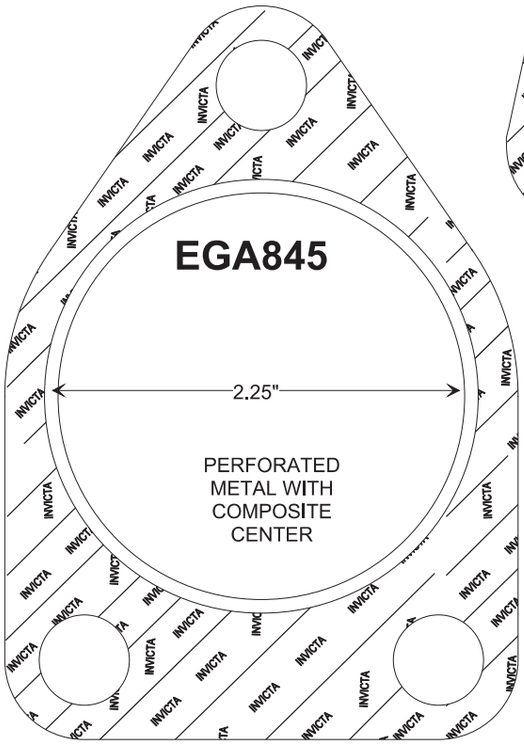

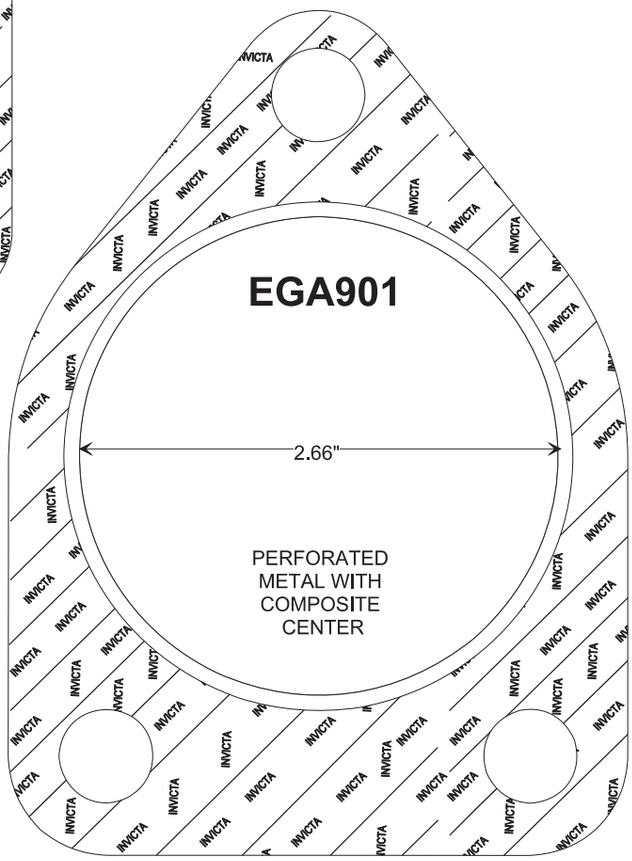

DESIGN STYLE 14

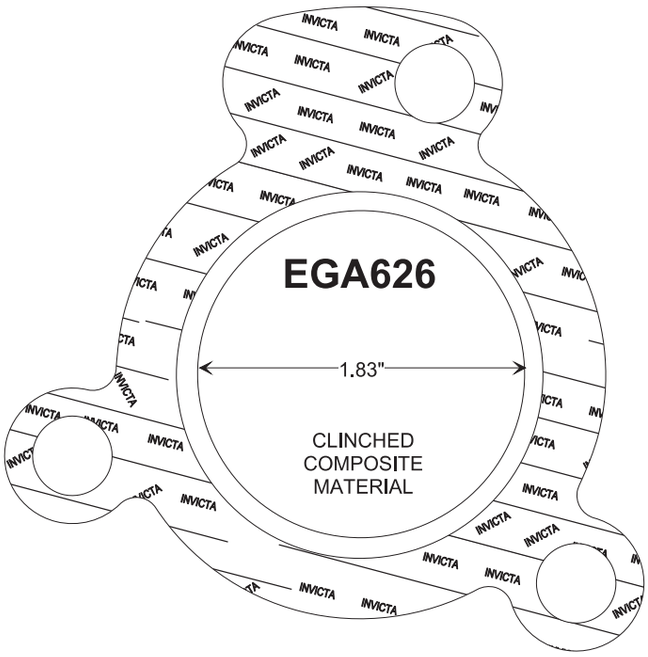

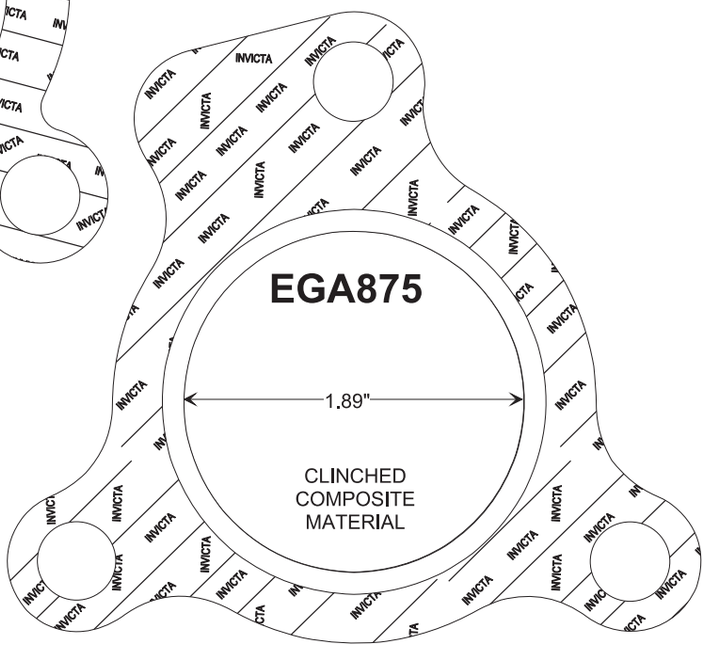

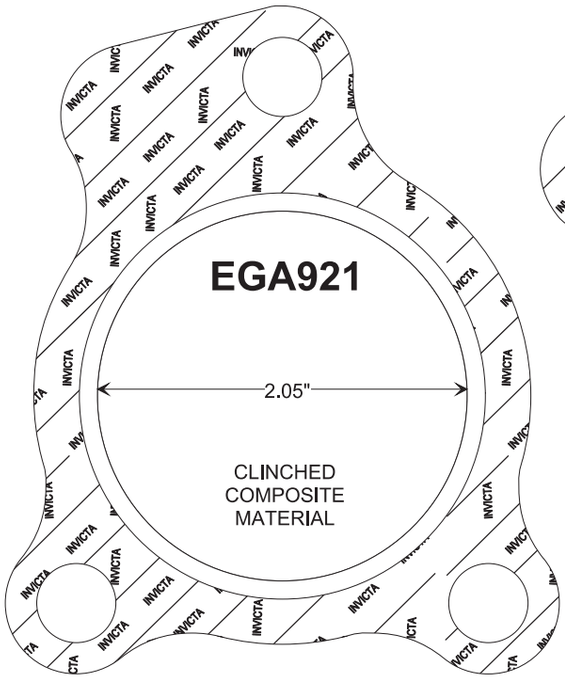

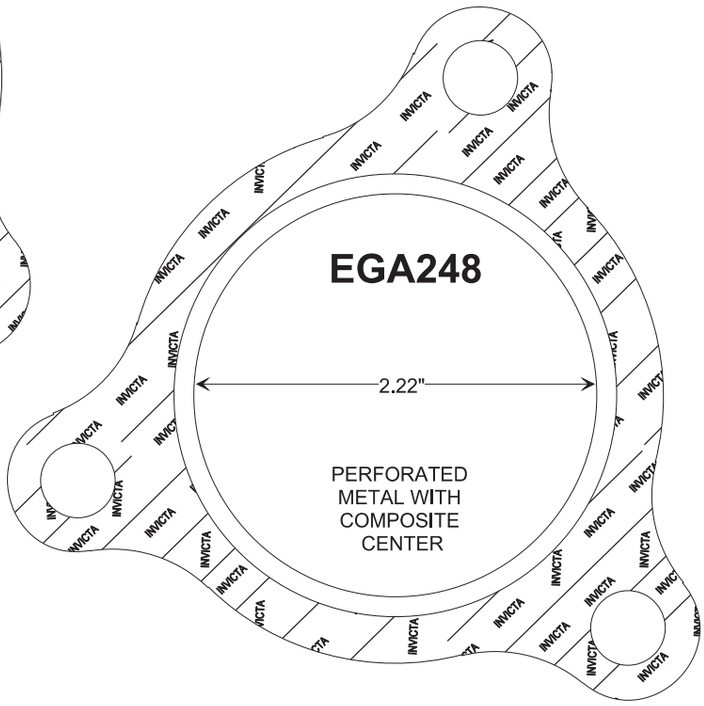

DESIGN STYLE 14

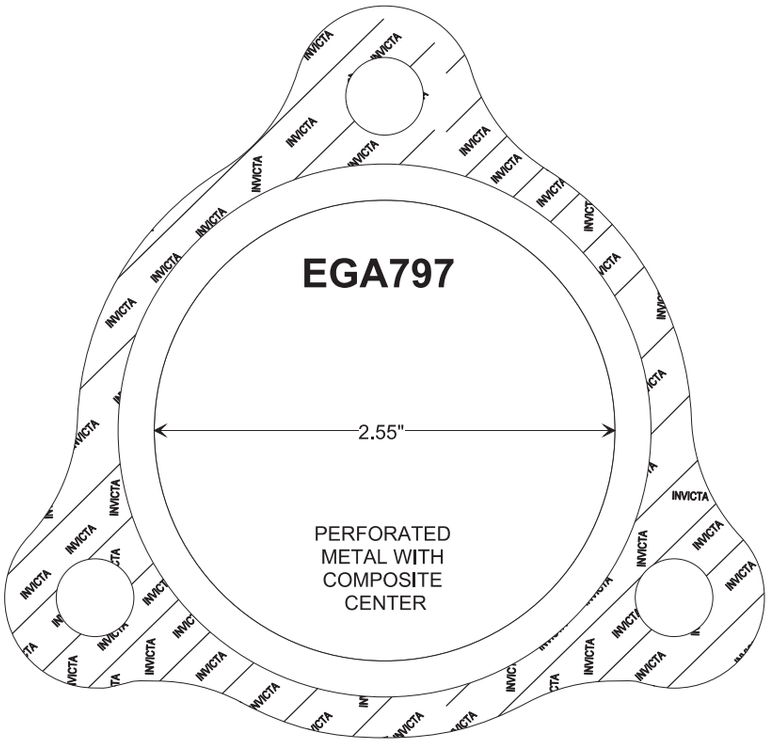

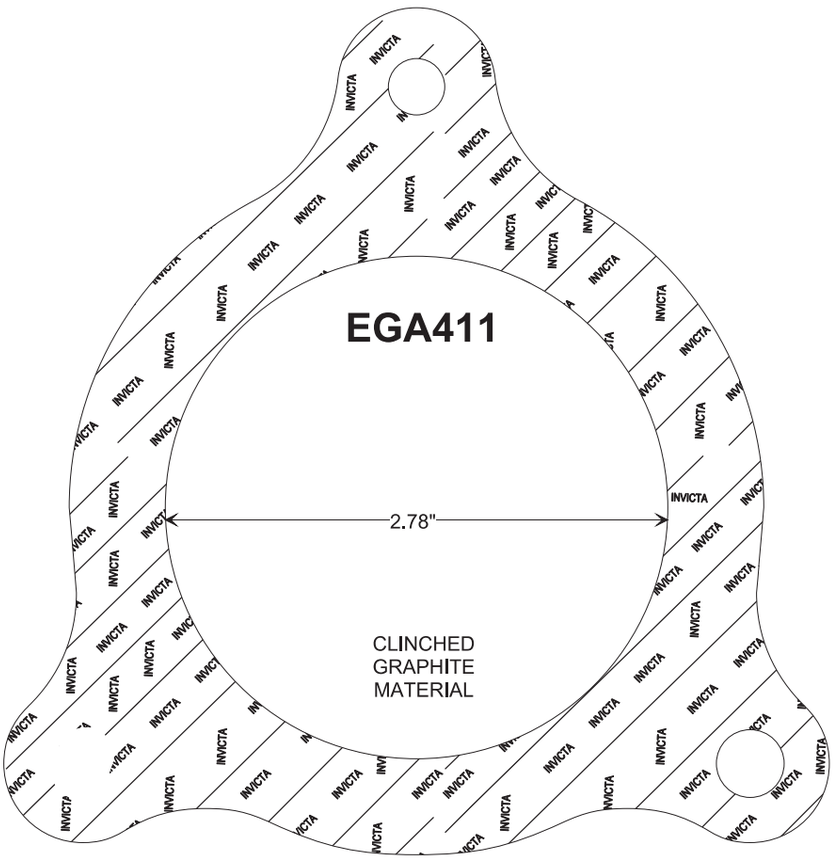

DESIGN STYLE 14

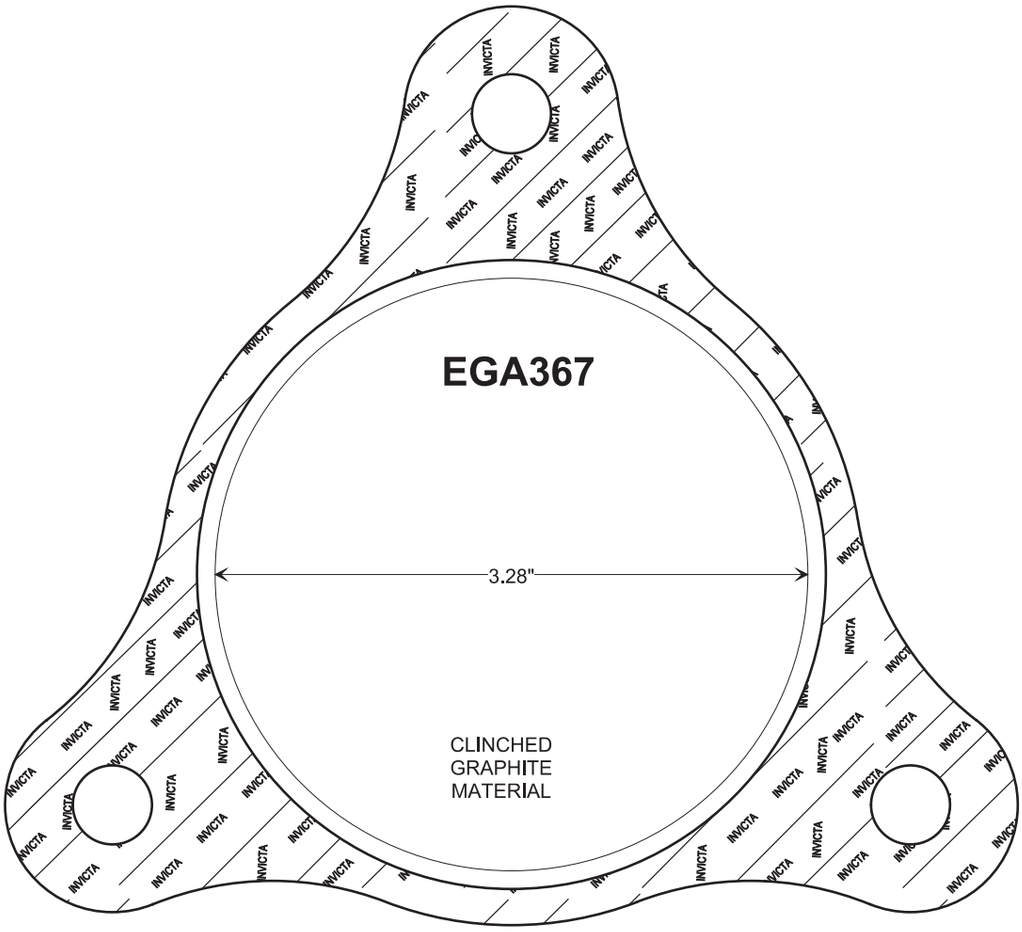

DESIGN STYLE 15

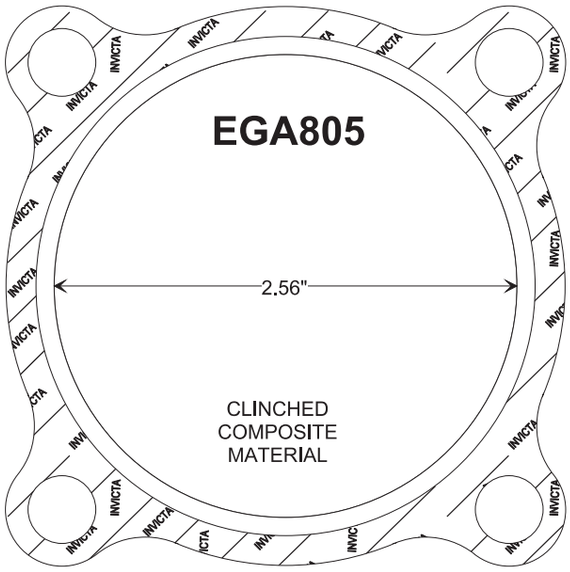

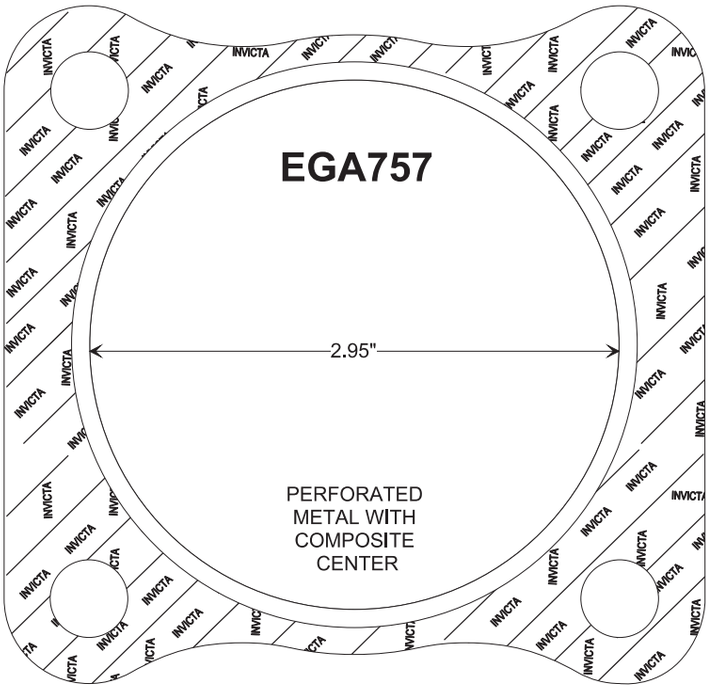

DESIGN STYLE 15

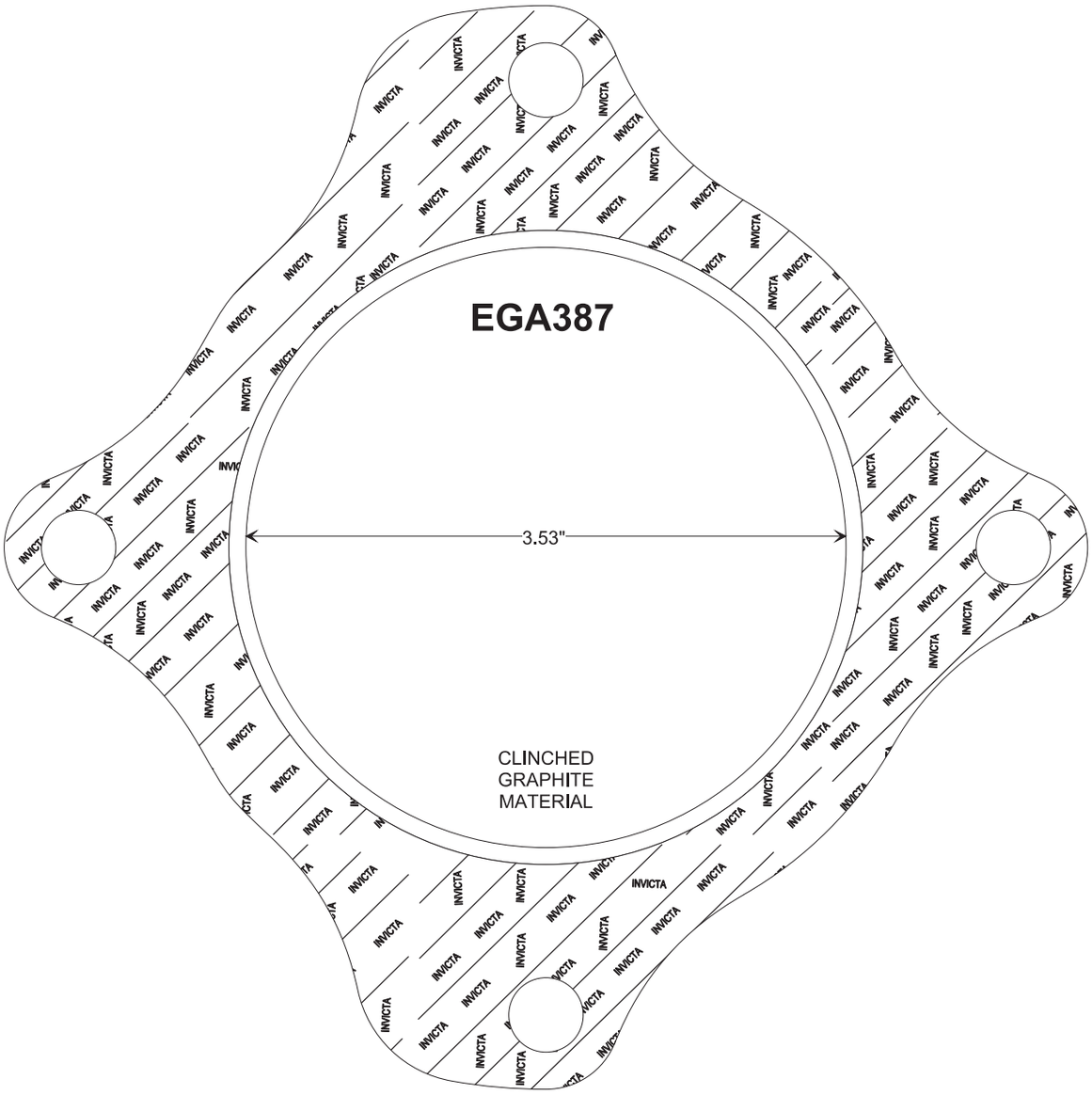

DESIGN STYLE 15

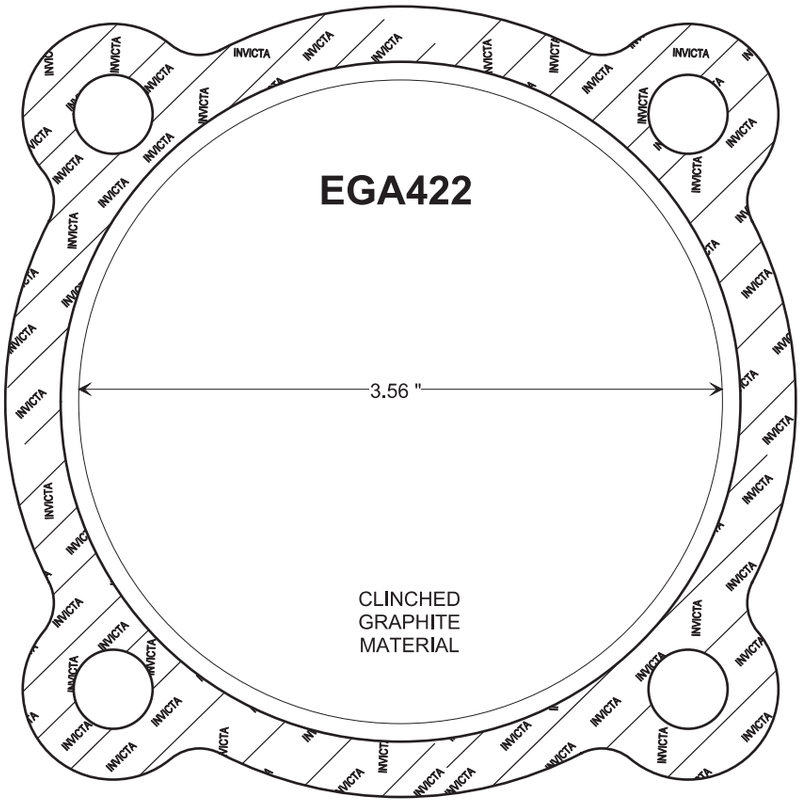

DESIGN STYLE 15

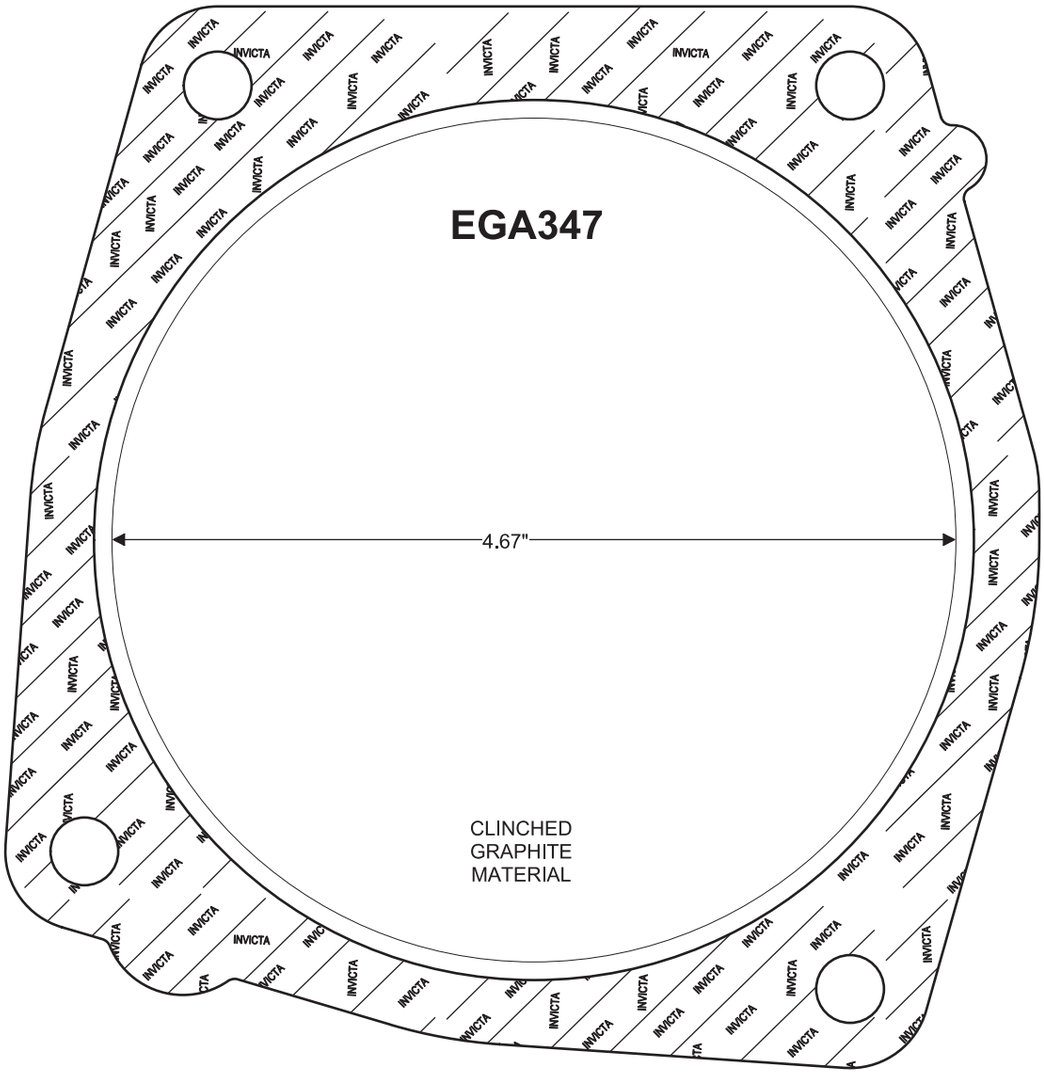

DESIGN STYLE 16

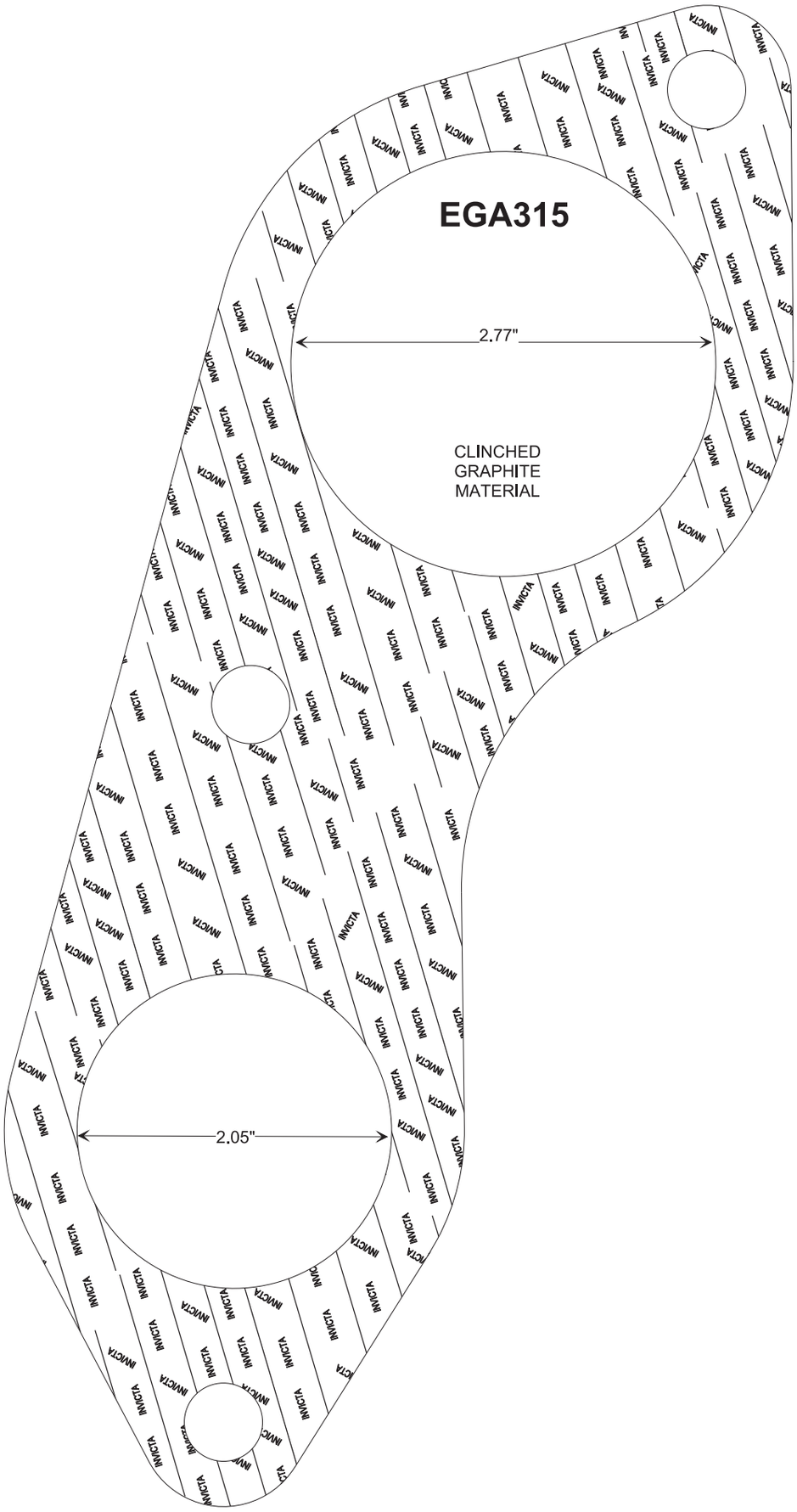

DESIGN STYLE 16

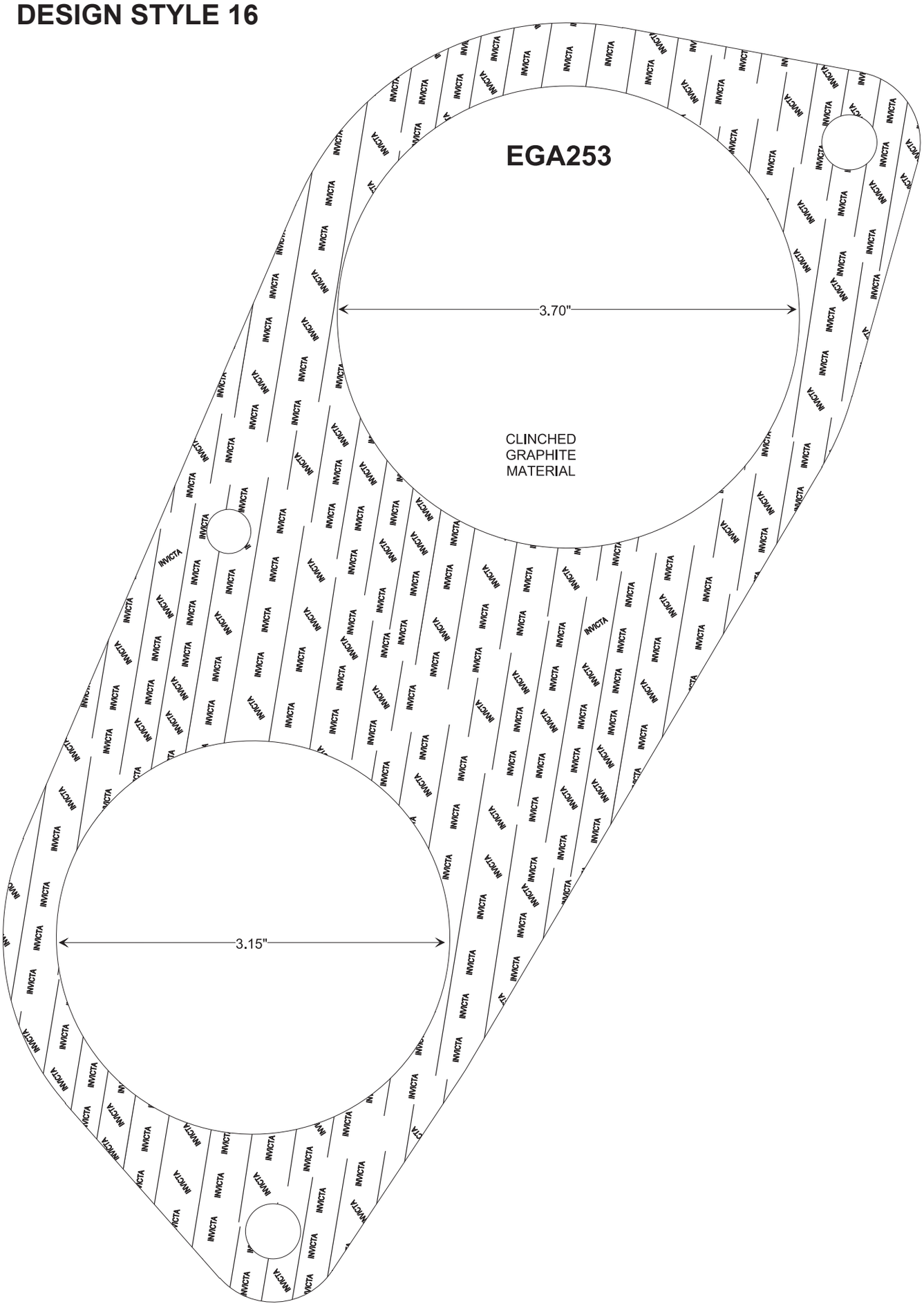

DESIGN STYLE 17

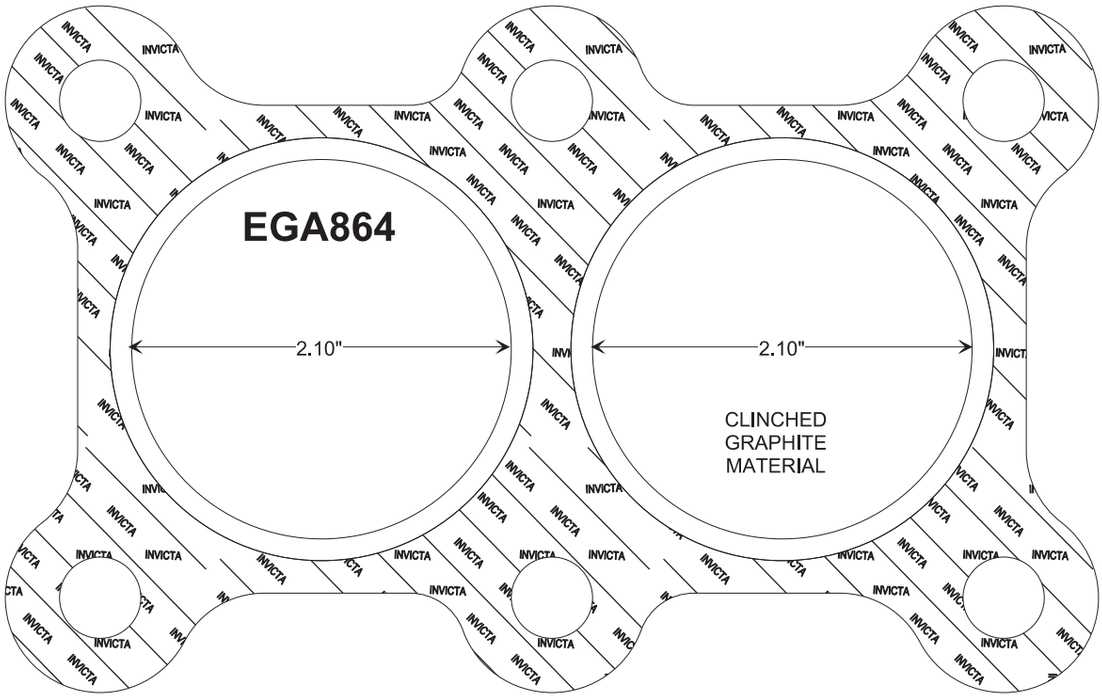

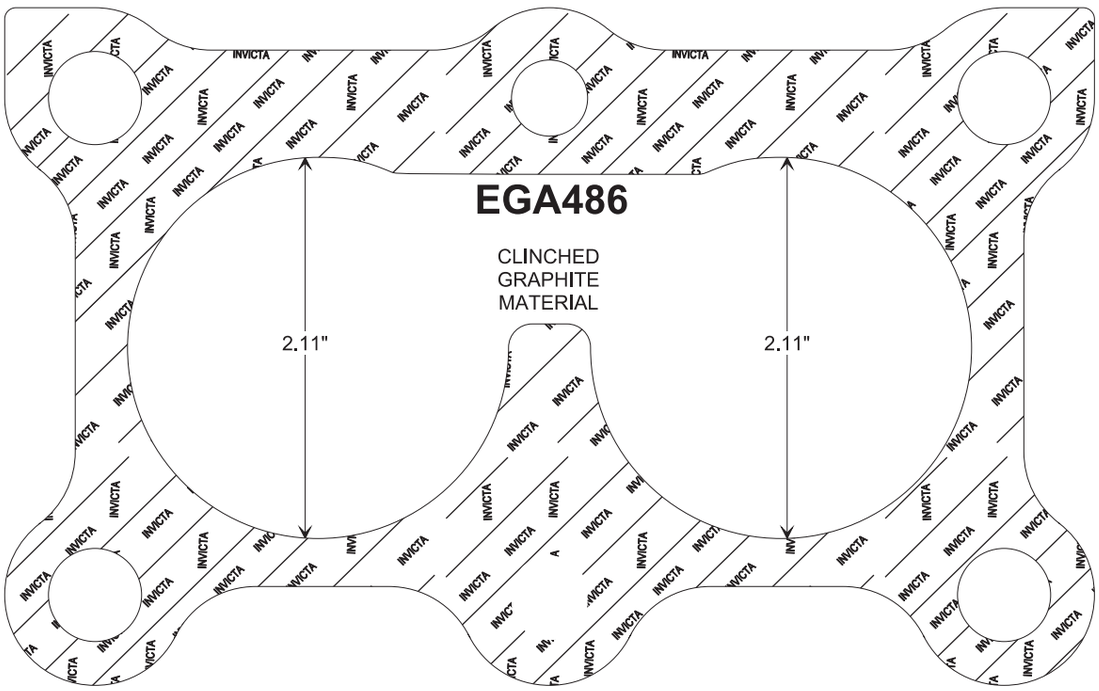

DESIGN STYLE 18

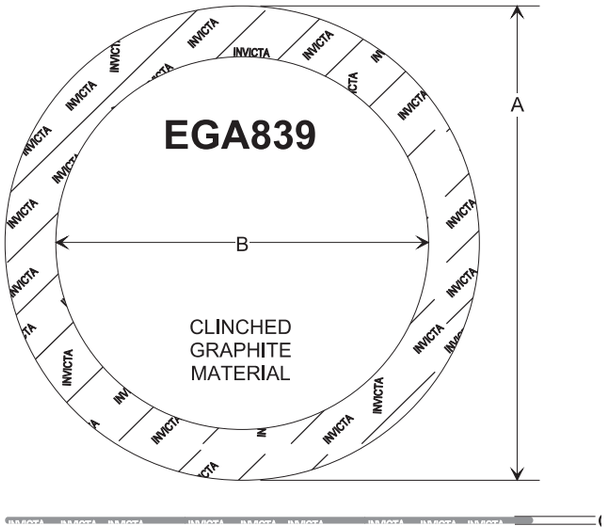

A-2.63" B-2.06" C-.05"

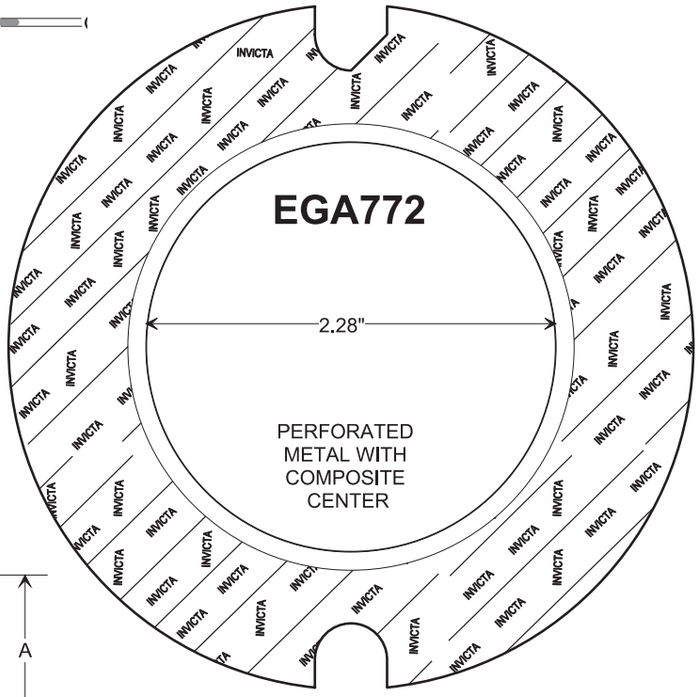

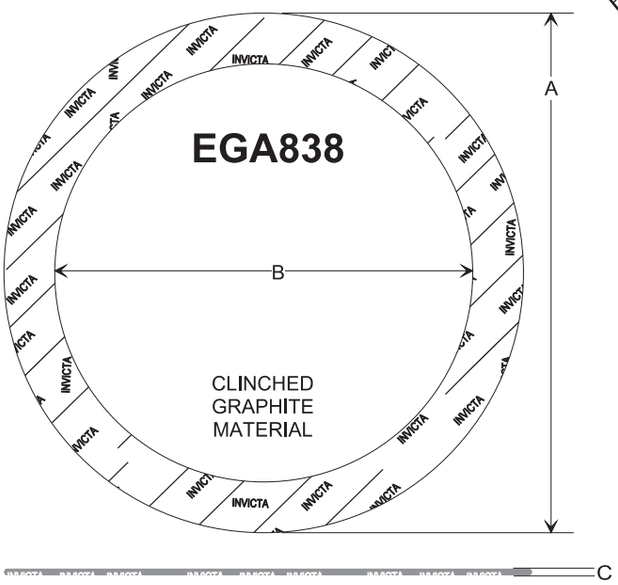

A-2.87" B-2.31" C-.05"

DESIGN STYLE 18

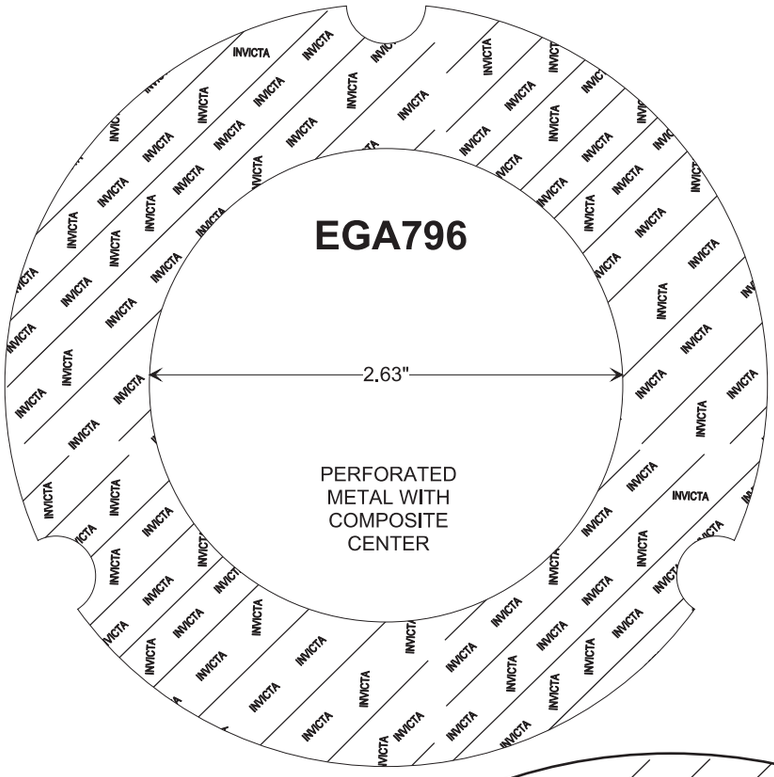

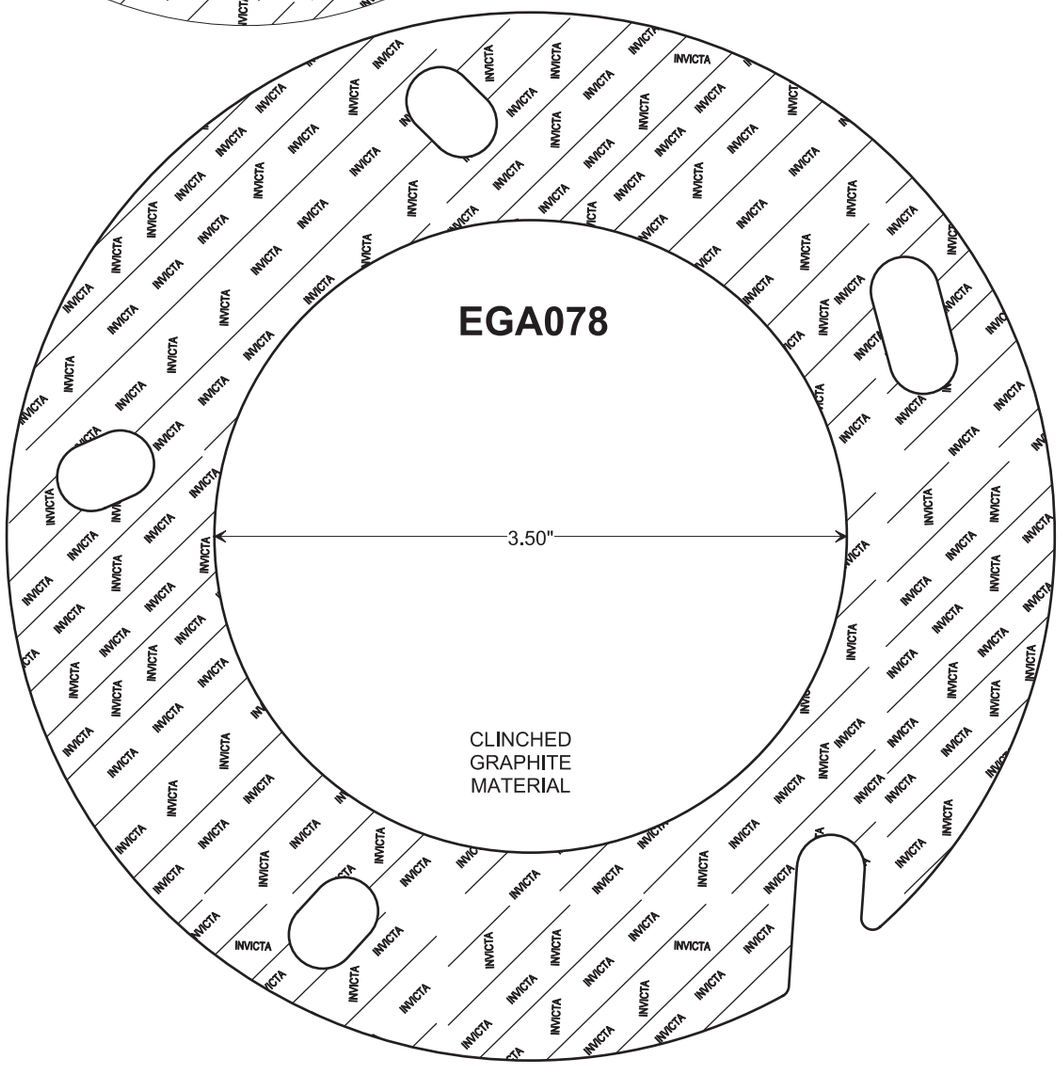

DESIGN STYLE 18

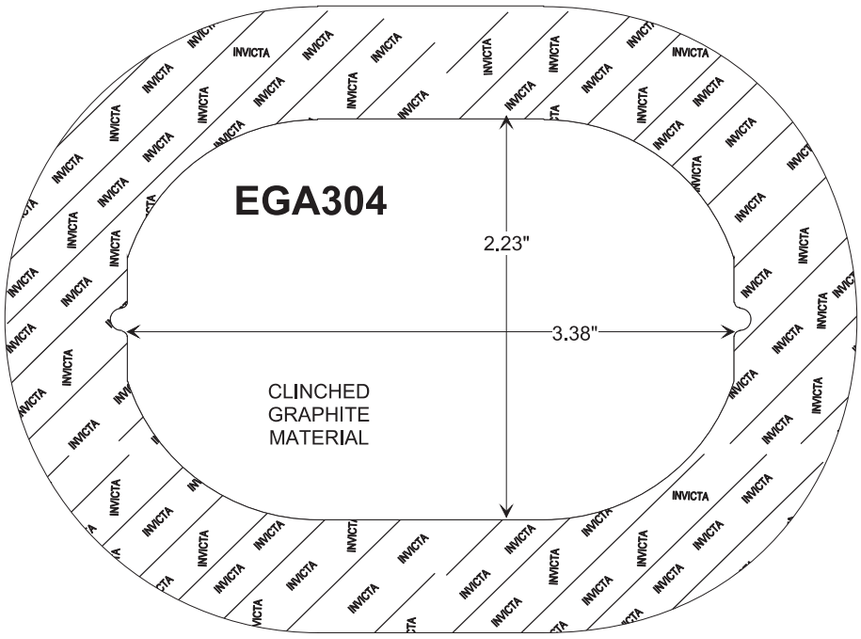

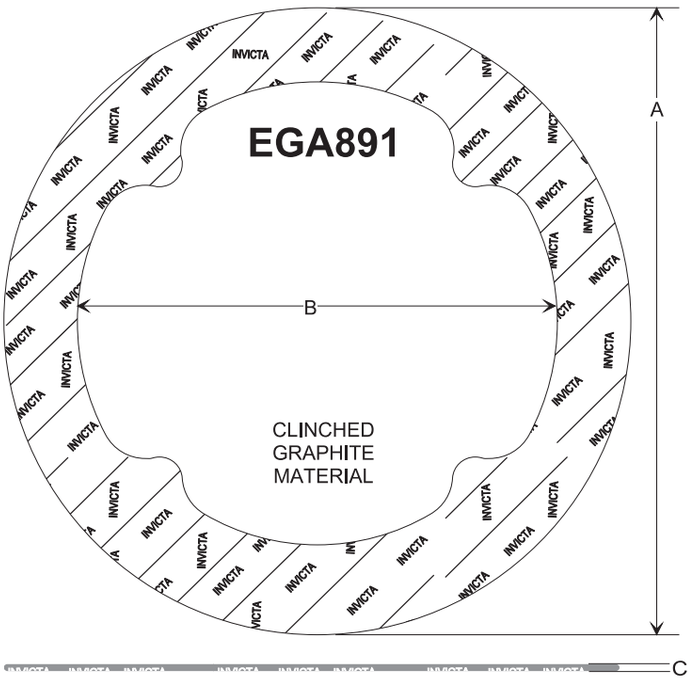

A-3.47" B-2.64" C-.07"

DESIGN STYLE 19

EGA449

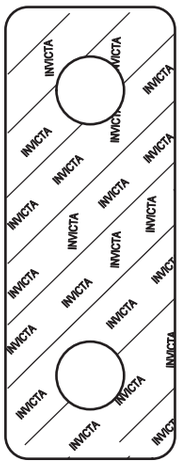

3/8"
Holes

CLINCHED
GRAPHITE
MATERIAL

EGA959

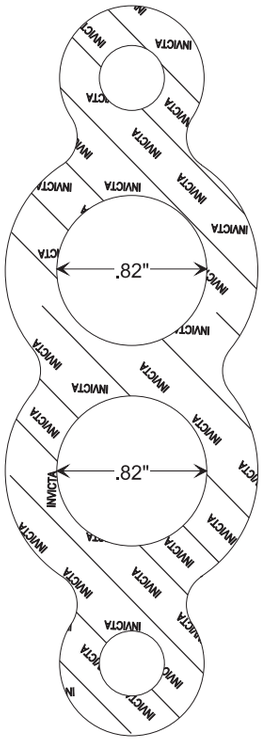

CLINCHED
COMPOSITE
MATERIAL

EGA780

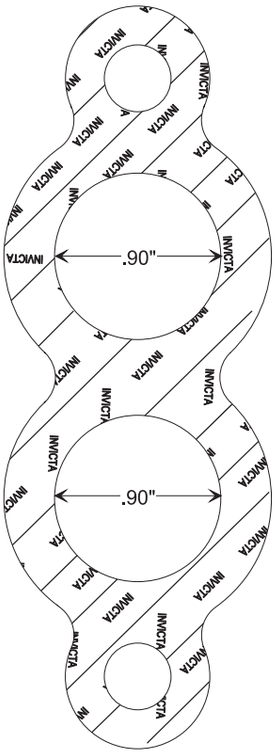

PERFORATED
METAL WITH
COMPOSITE
CENTER

EGA861

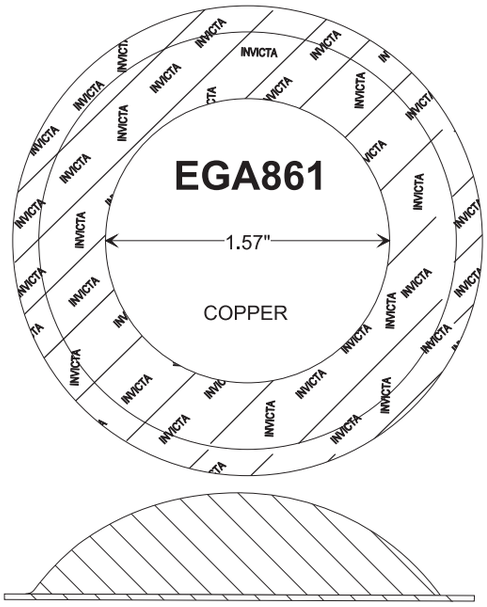

EGA896

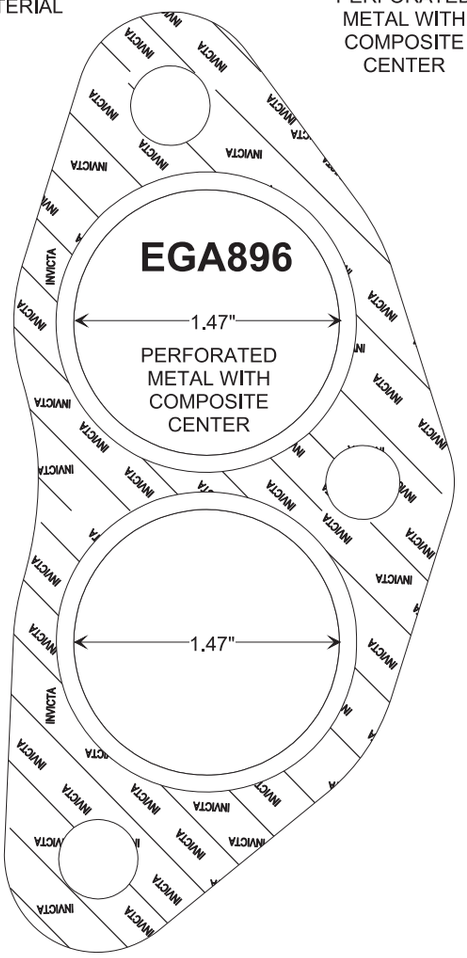

DESIGN STYLE 19

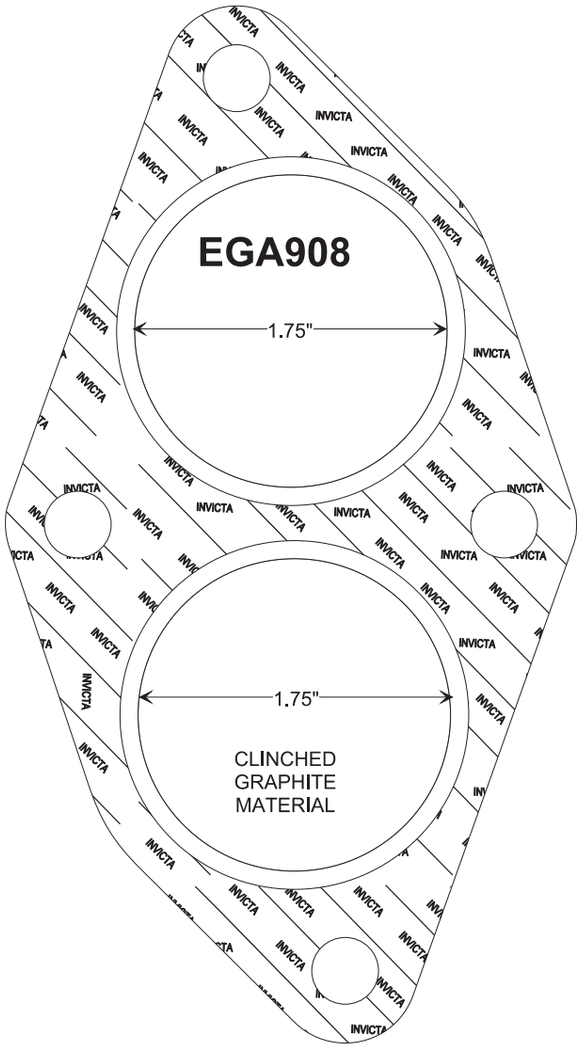

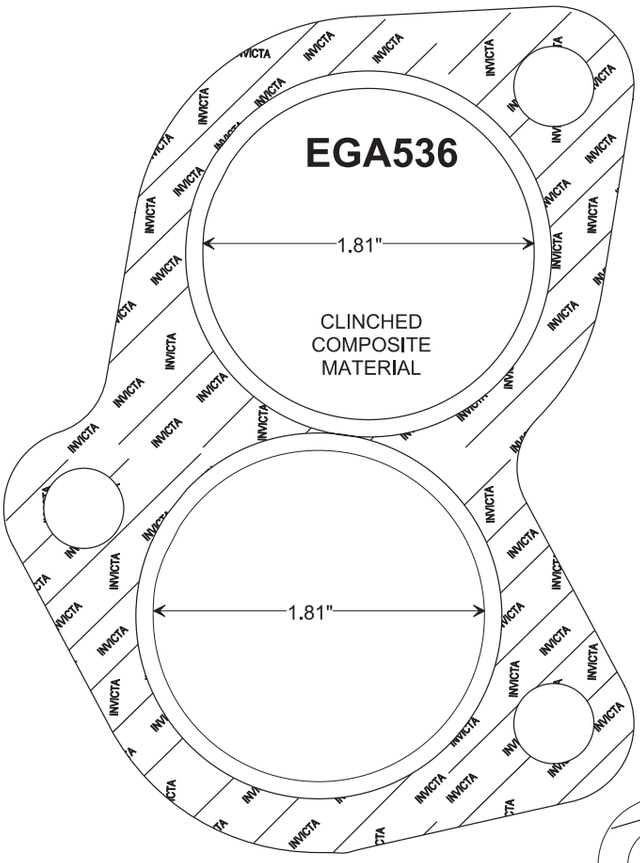

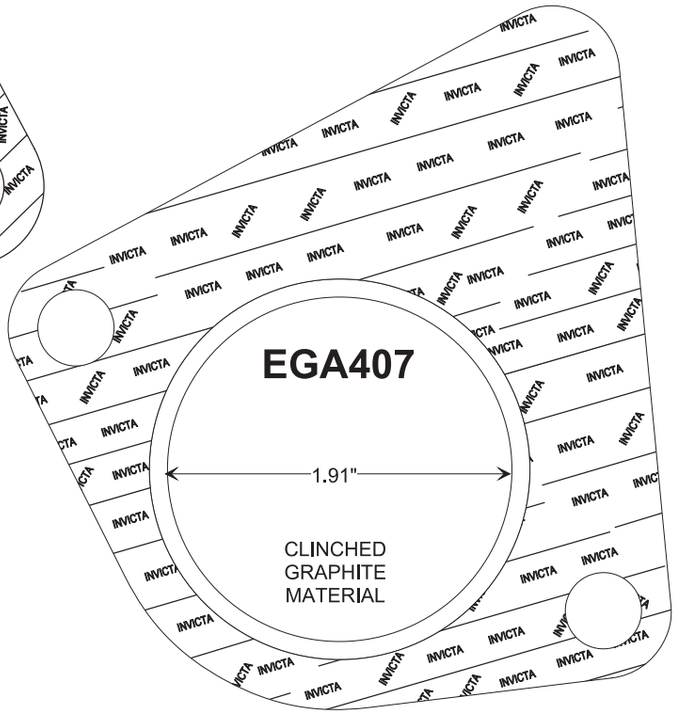

DESIGN STYLE 19

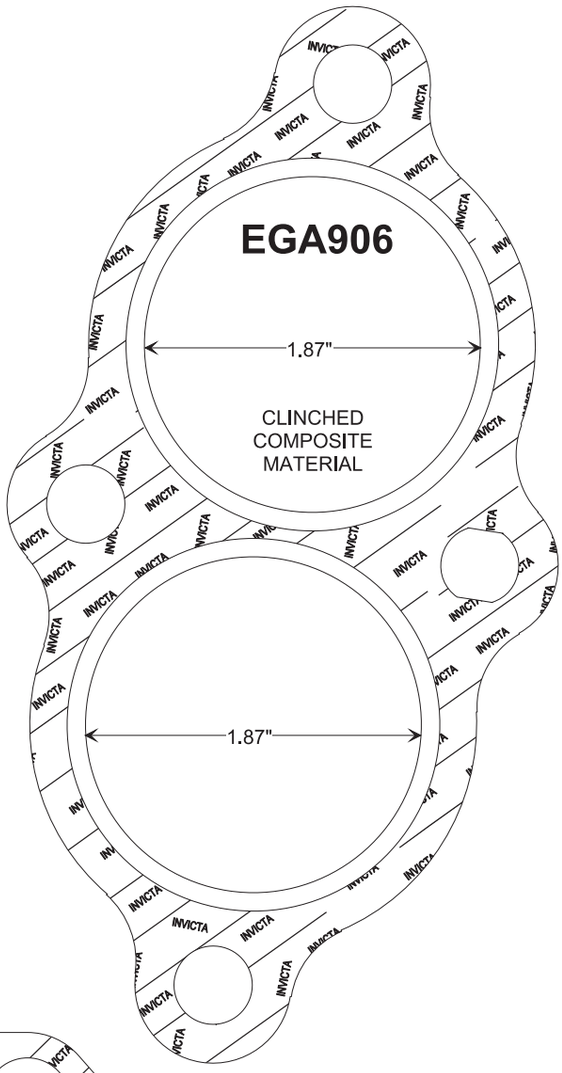

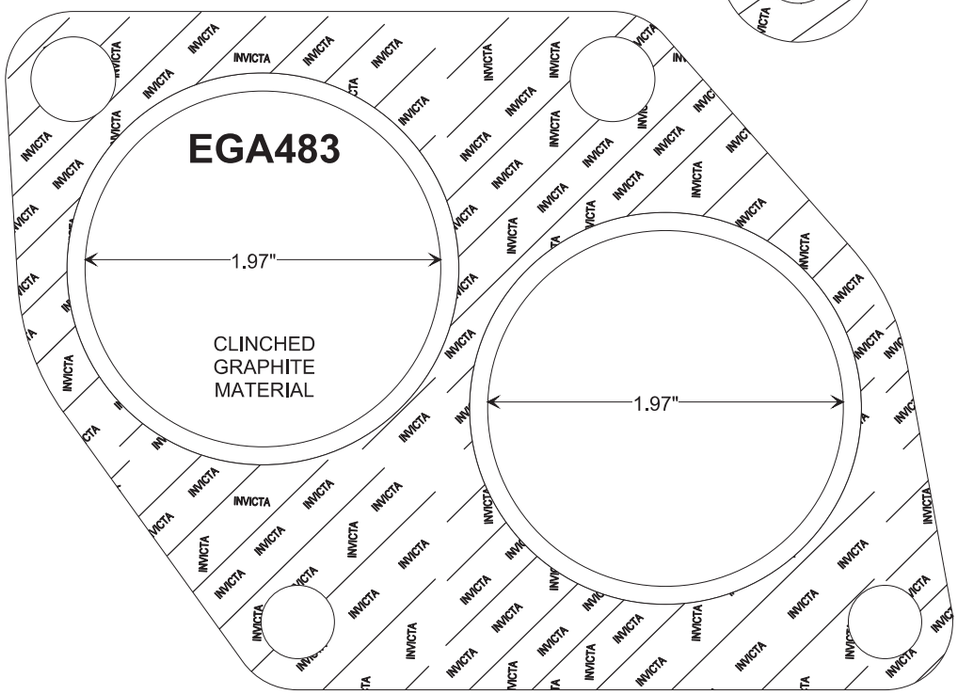

DESIGN STYLE 19

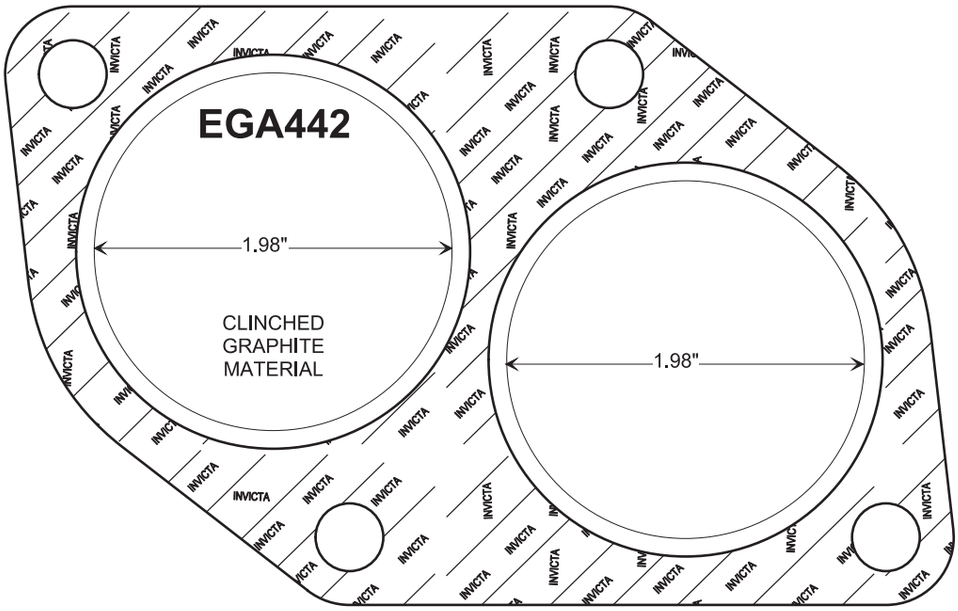

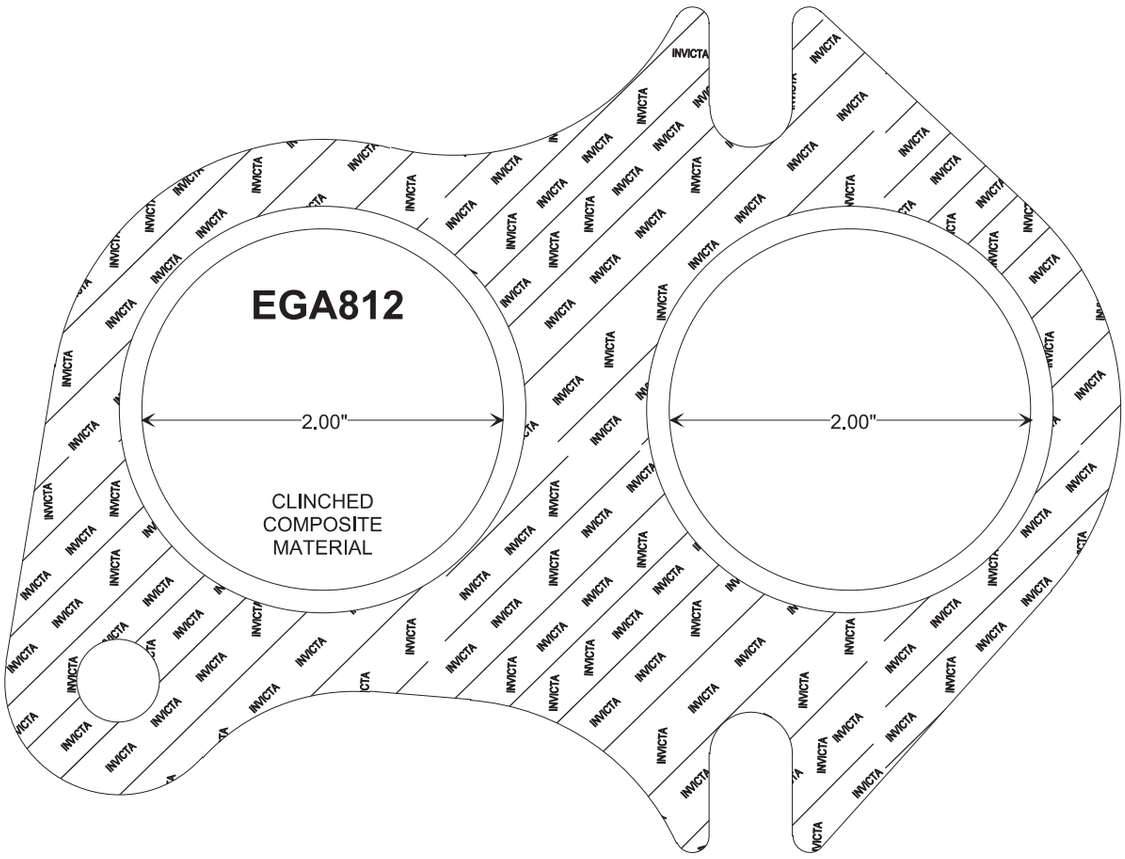

DESIGN STYLE 19

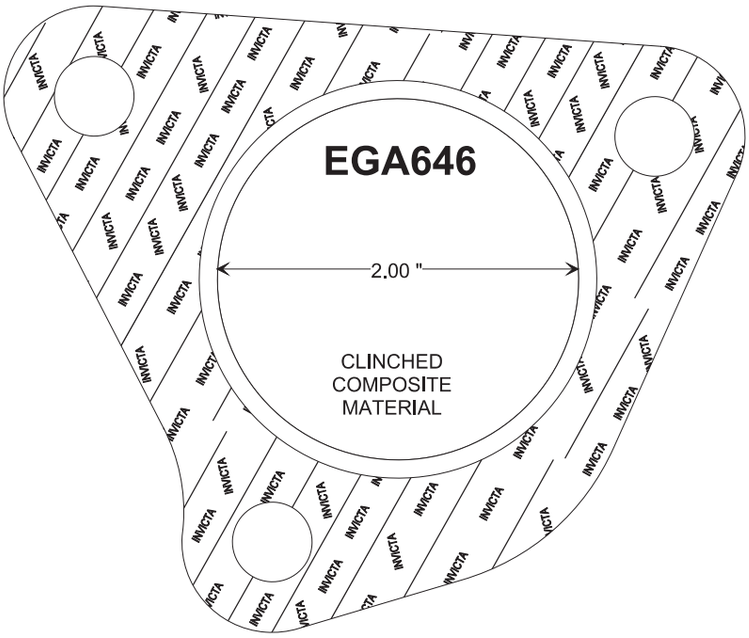

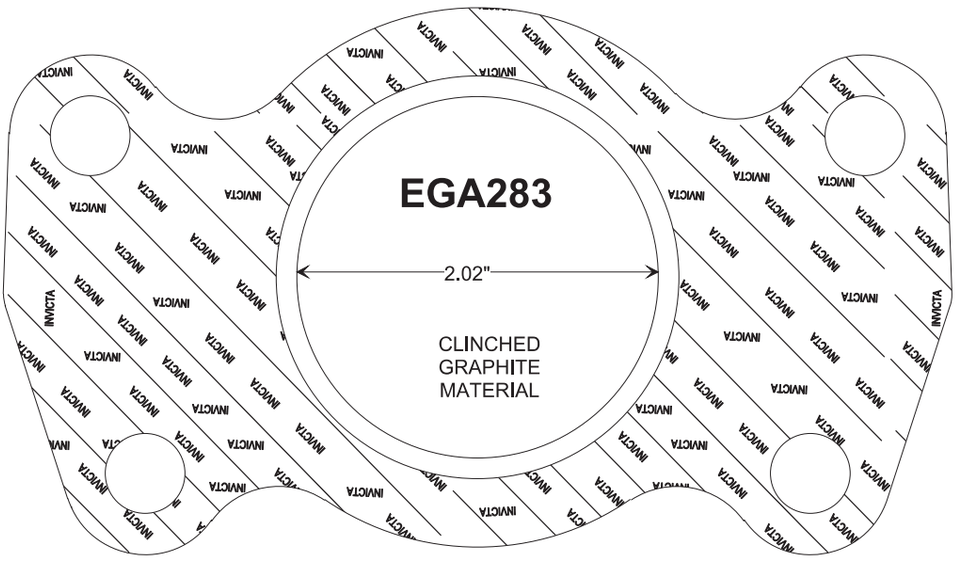

DESIGN STYLE 19

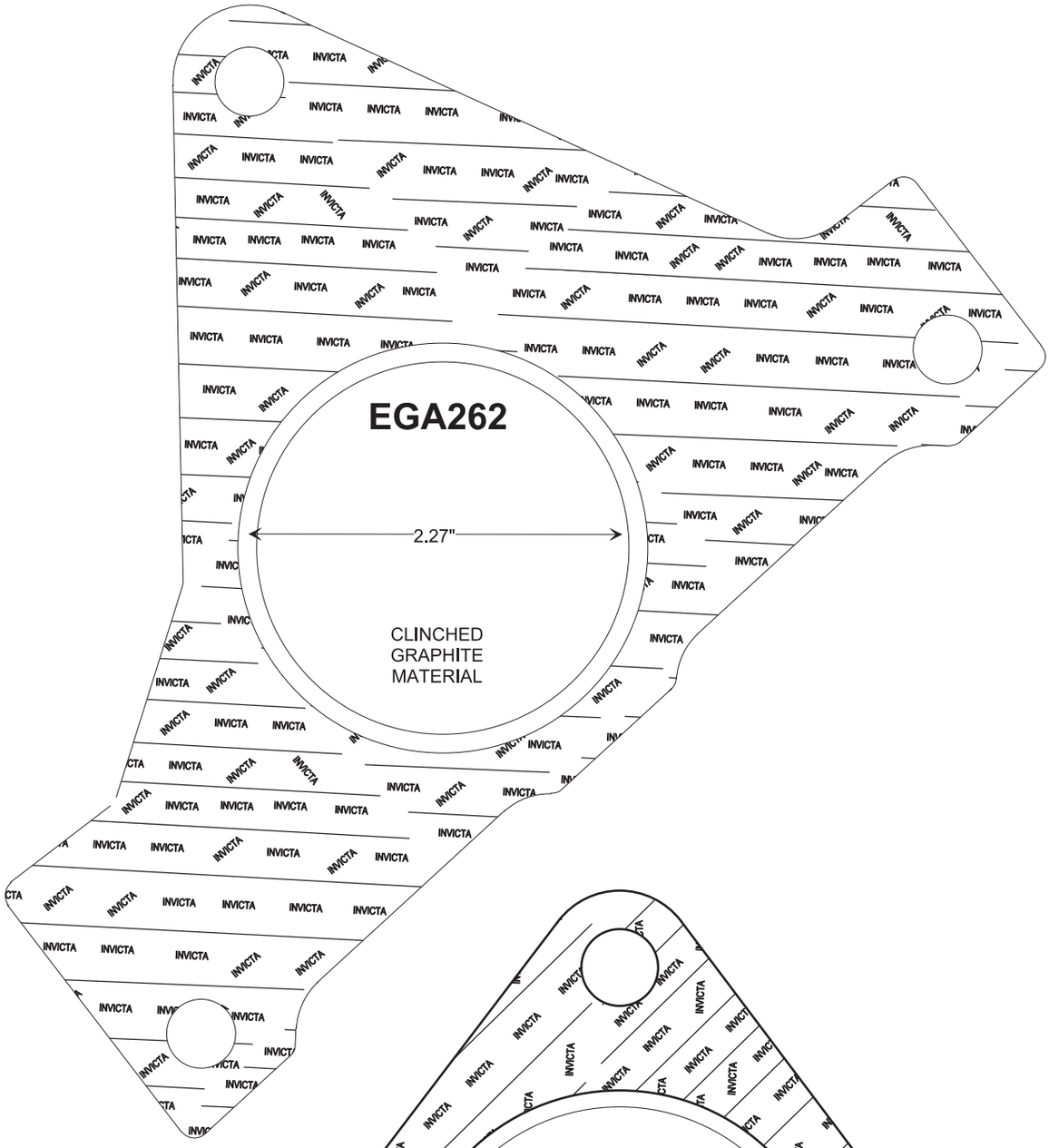

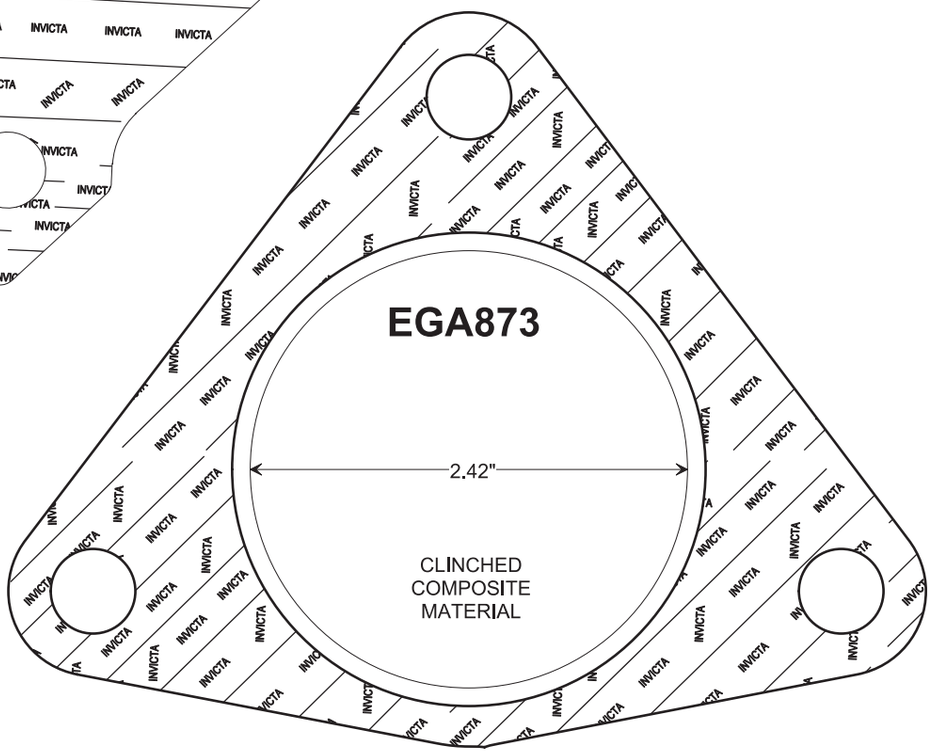

DESIGN STYLE 19

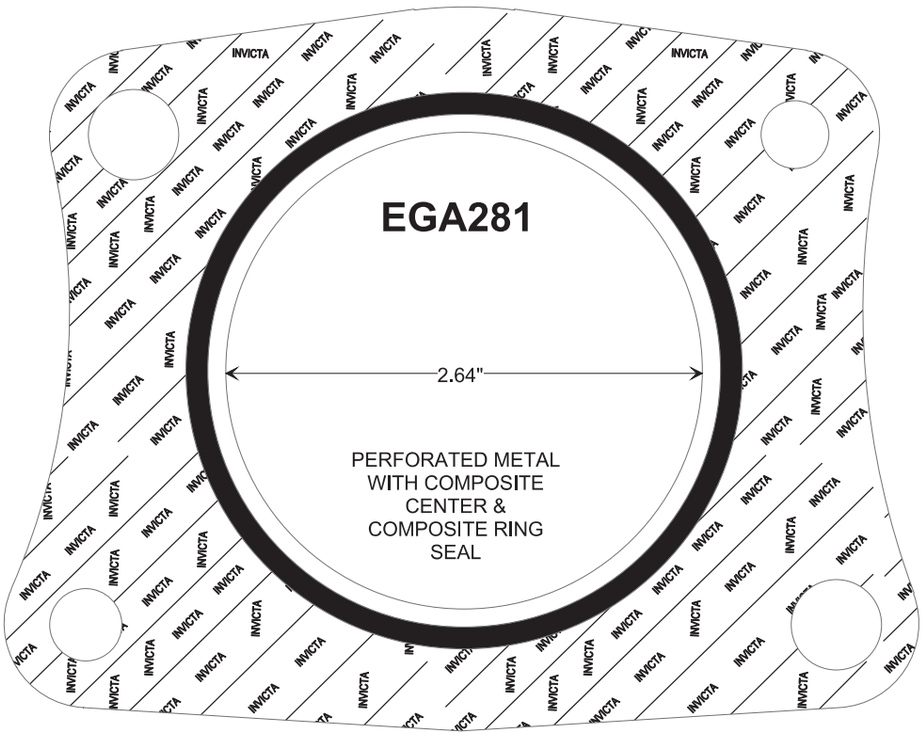

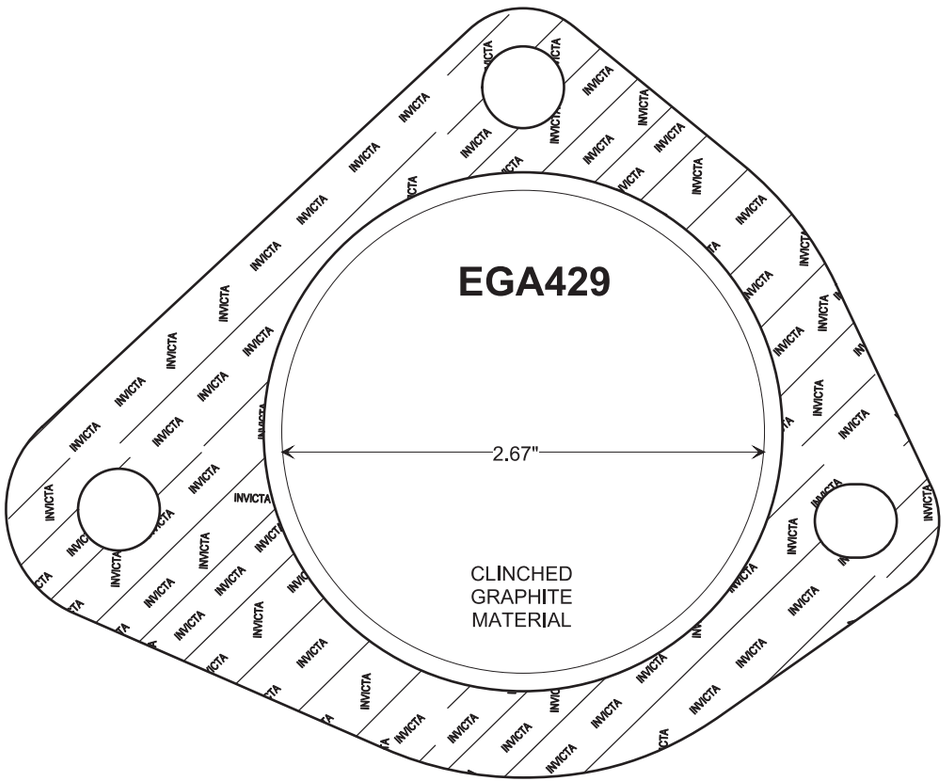

DESIGN STYLE 19

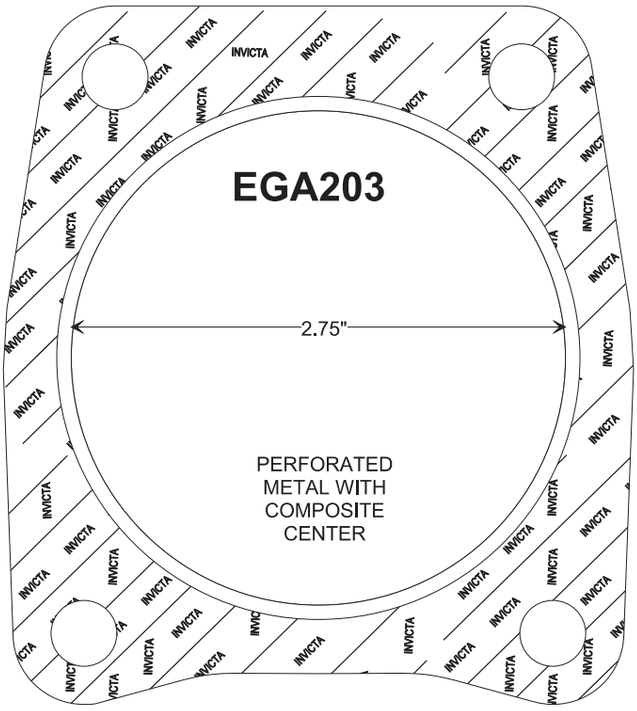

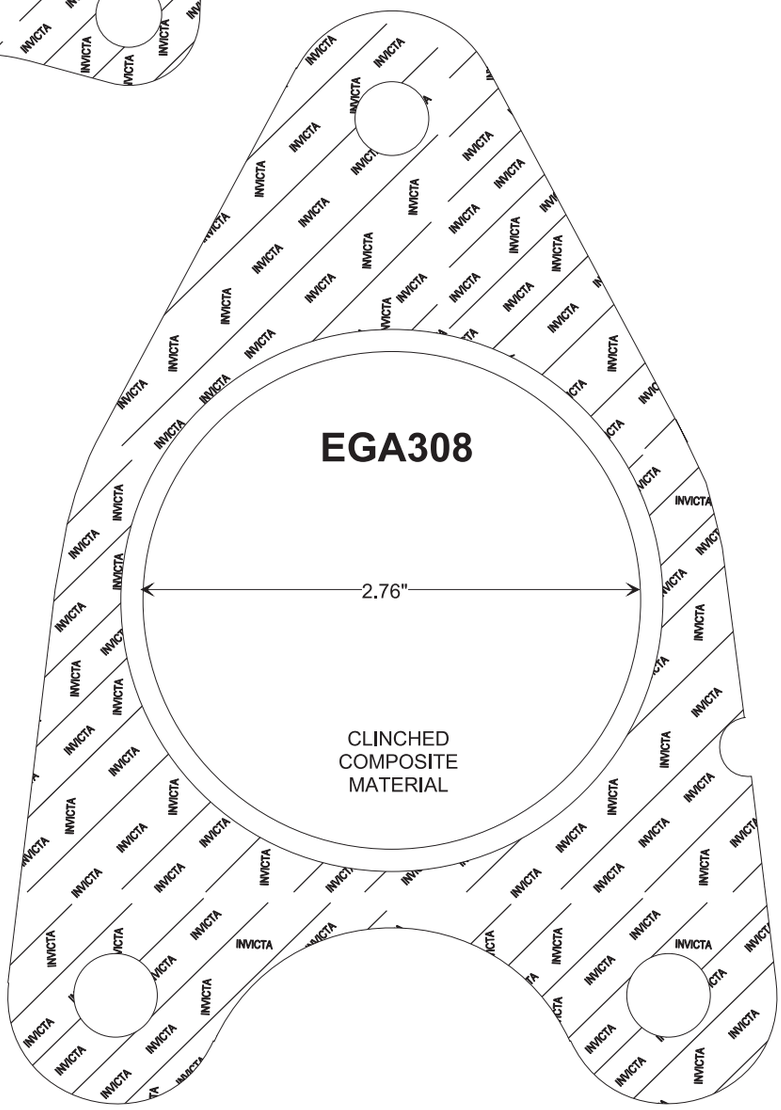

DESIGN STYLE 19

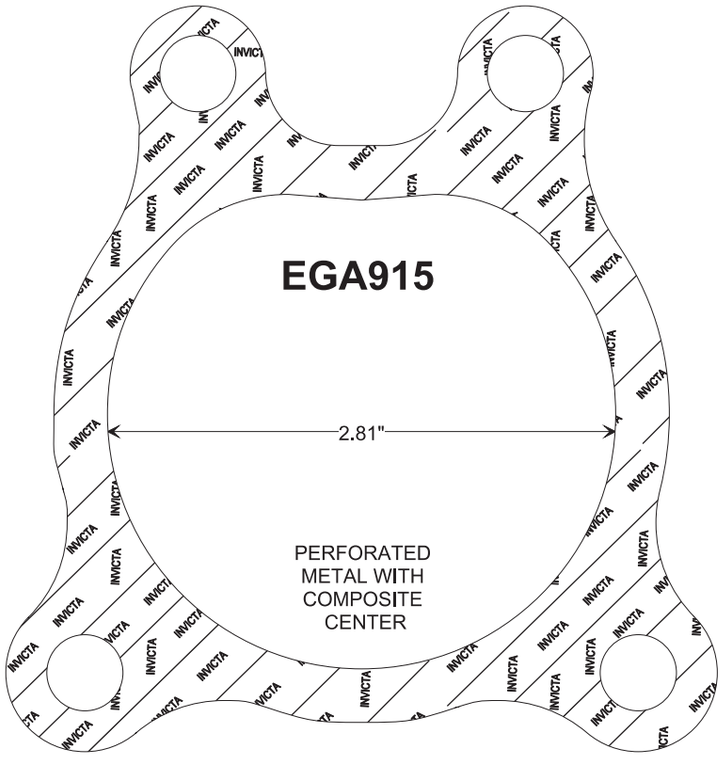

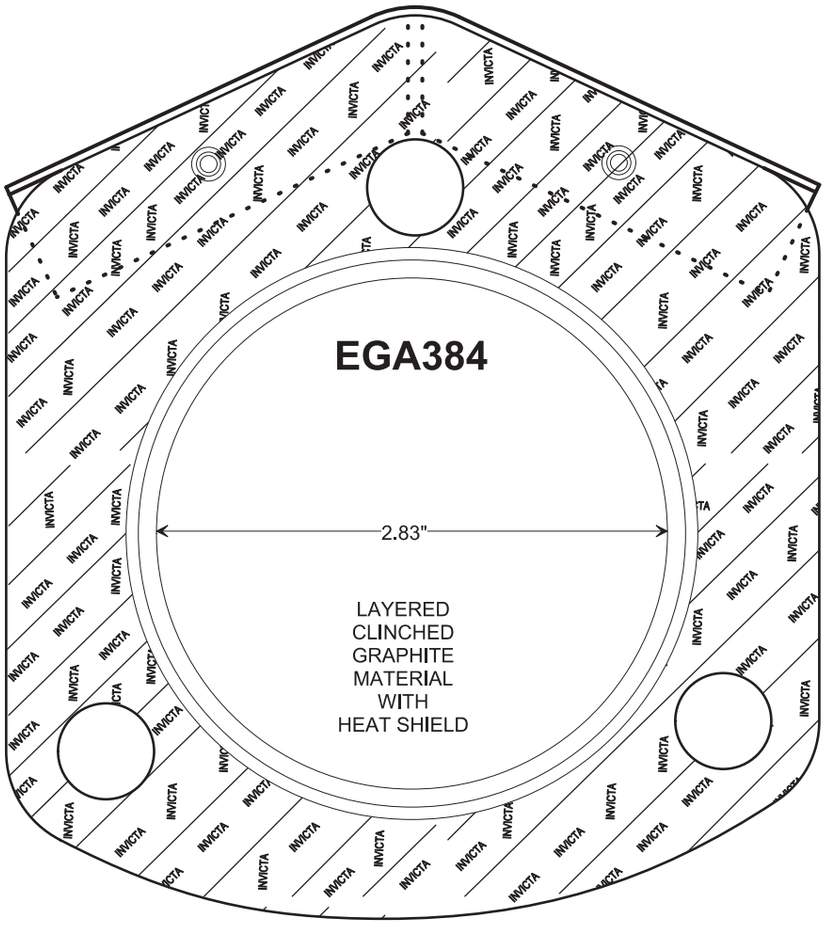

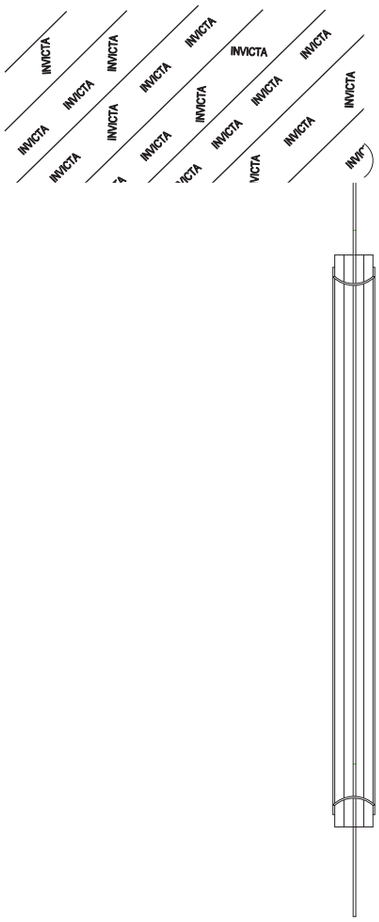

DESIGN STYLE 19

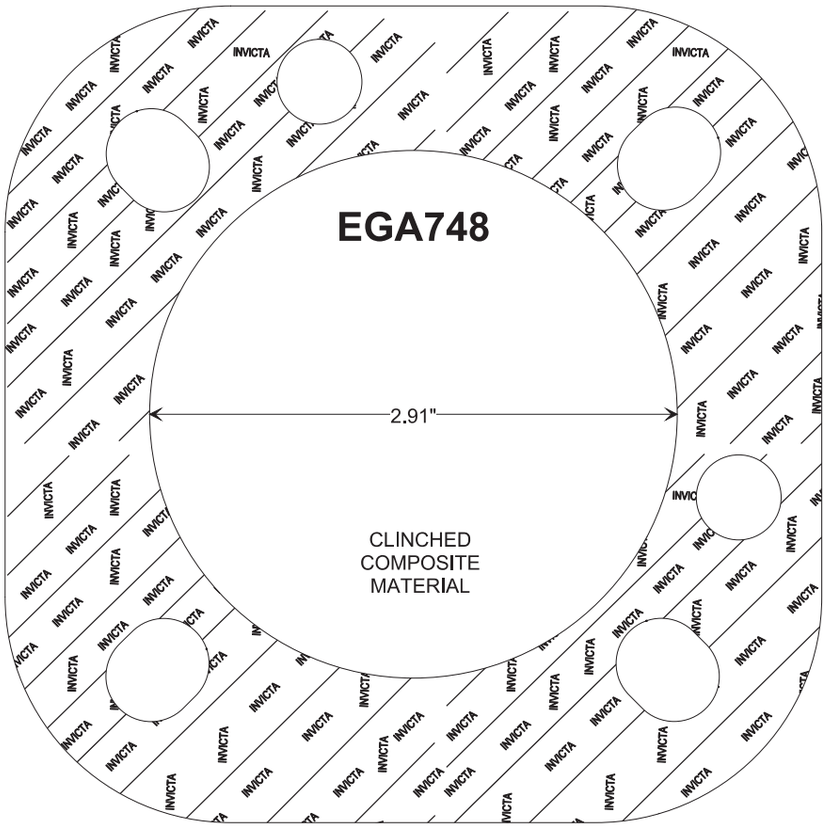

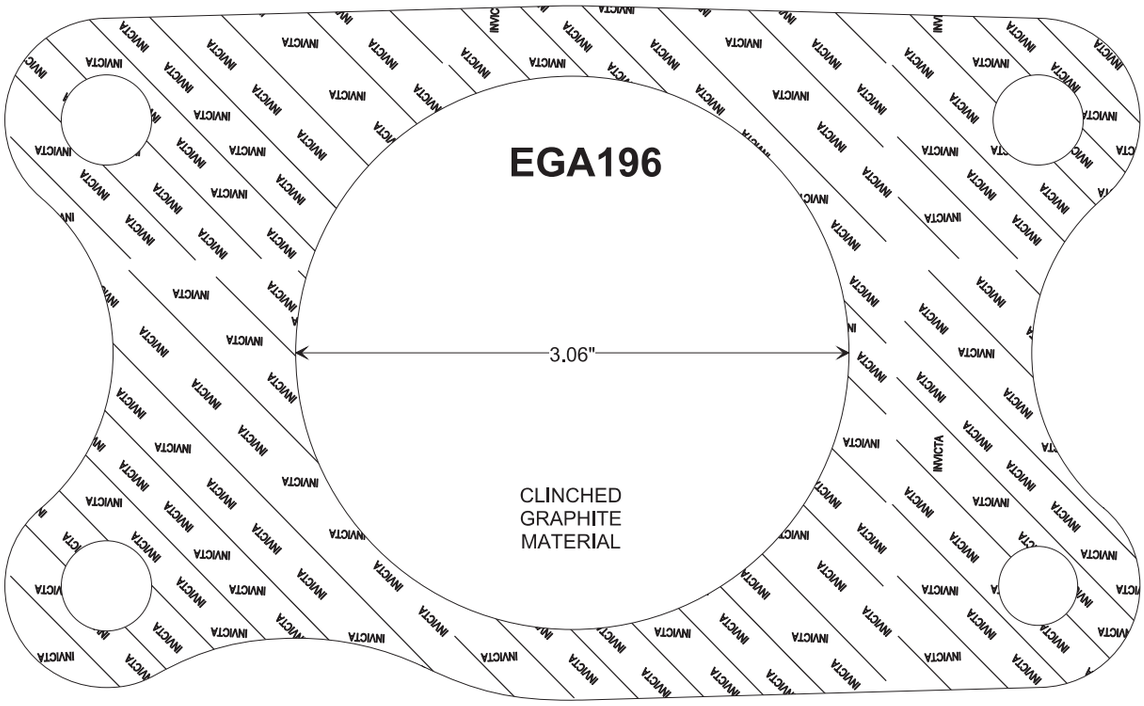

DESIGN STYLE 19

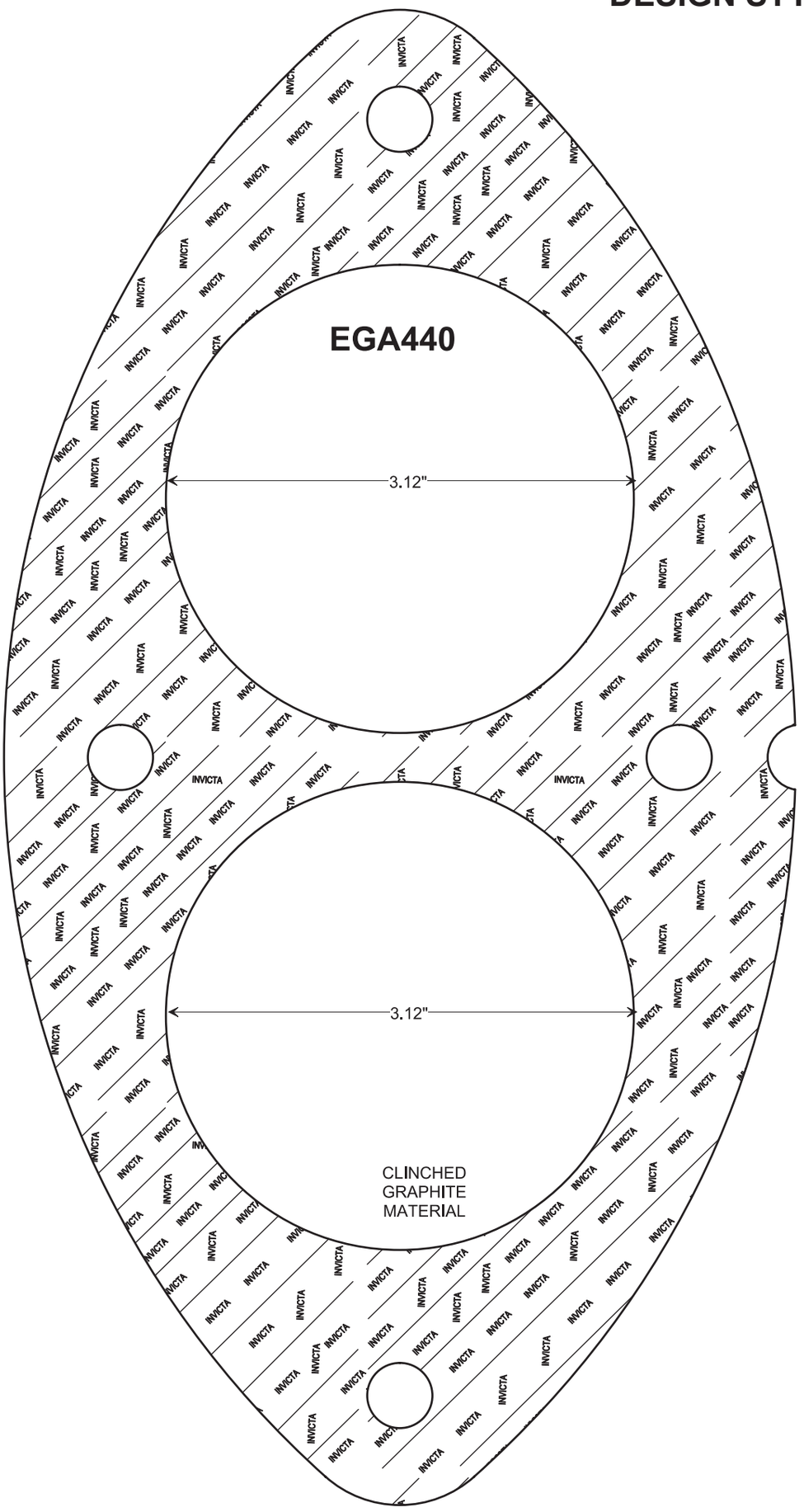

DESIGN STYLE 19

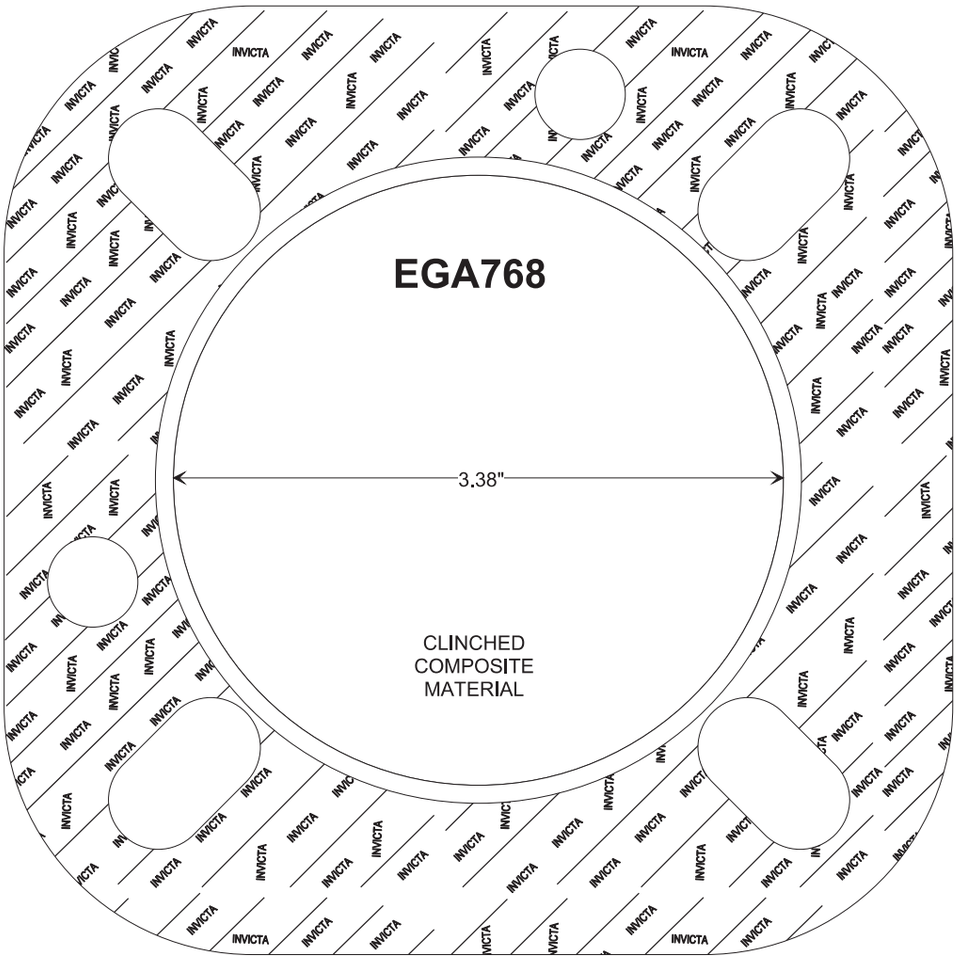

DESIGN STYLE 19

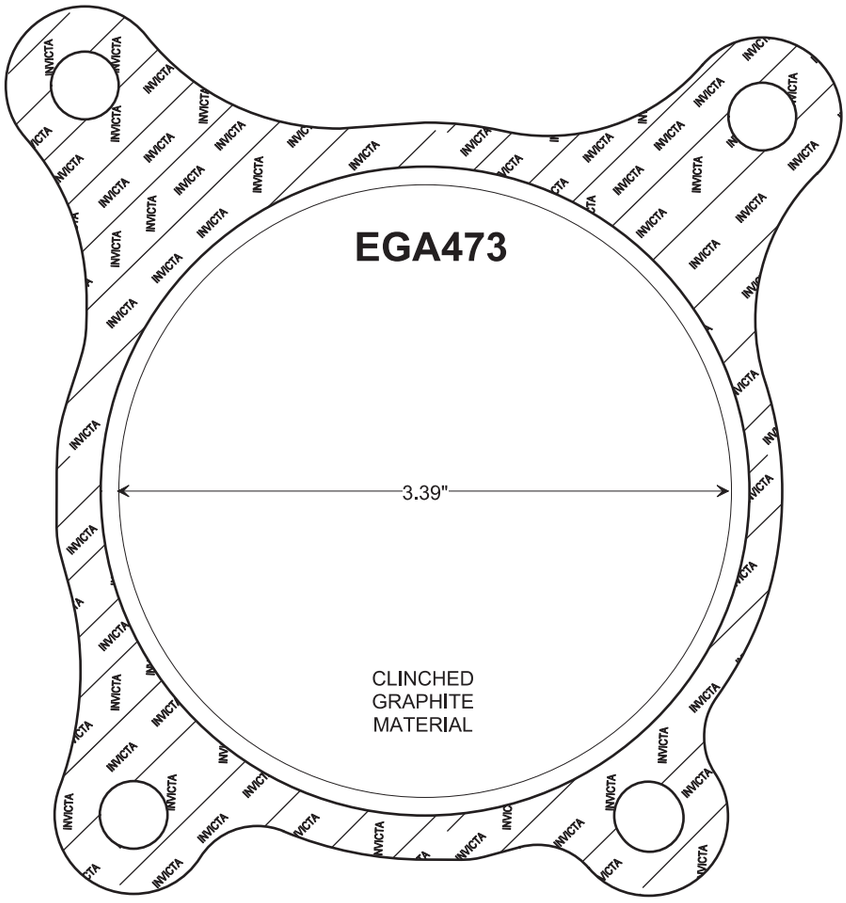

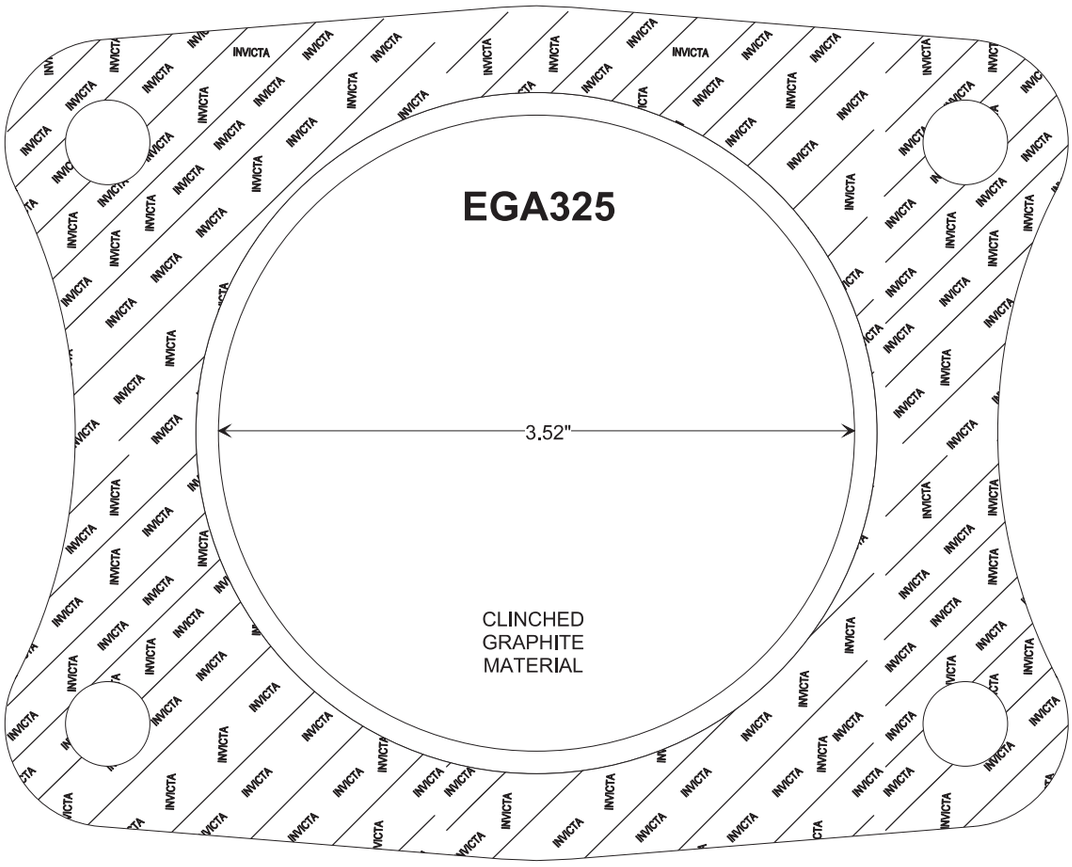

DESIGN STYLE 19

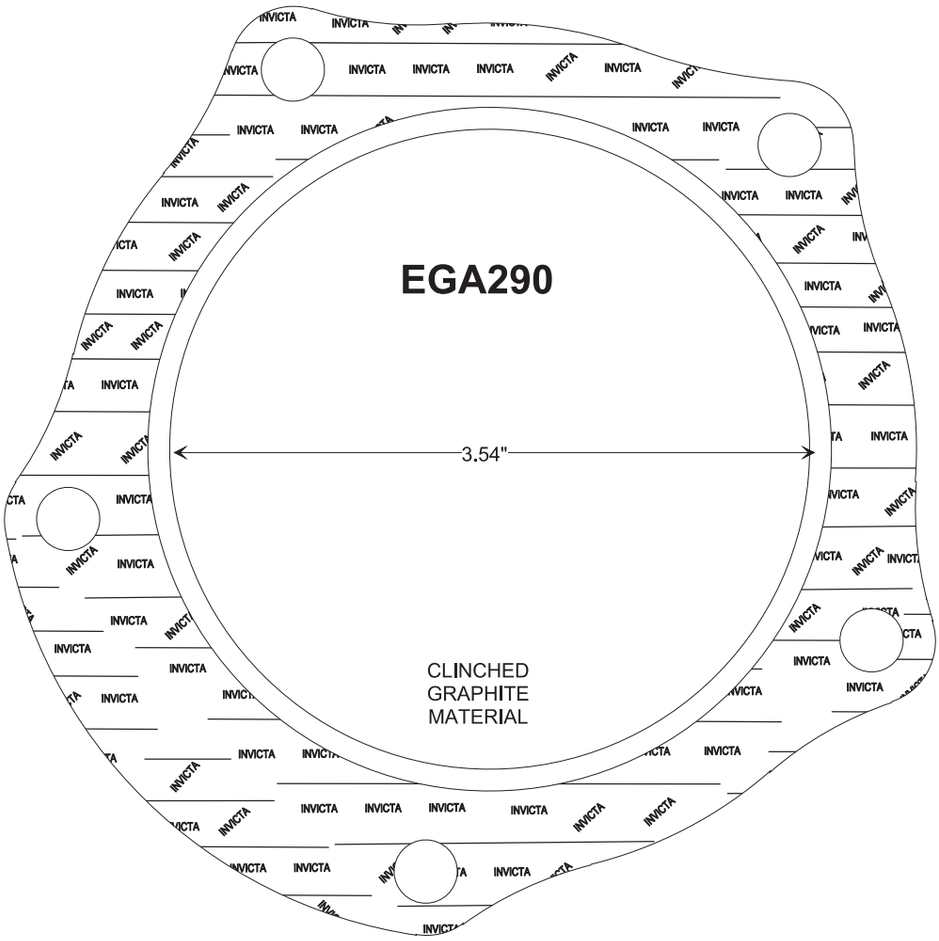

DESIGN STYLE 19

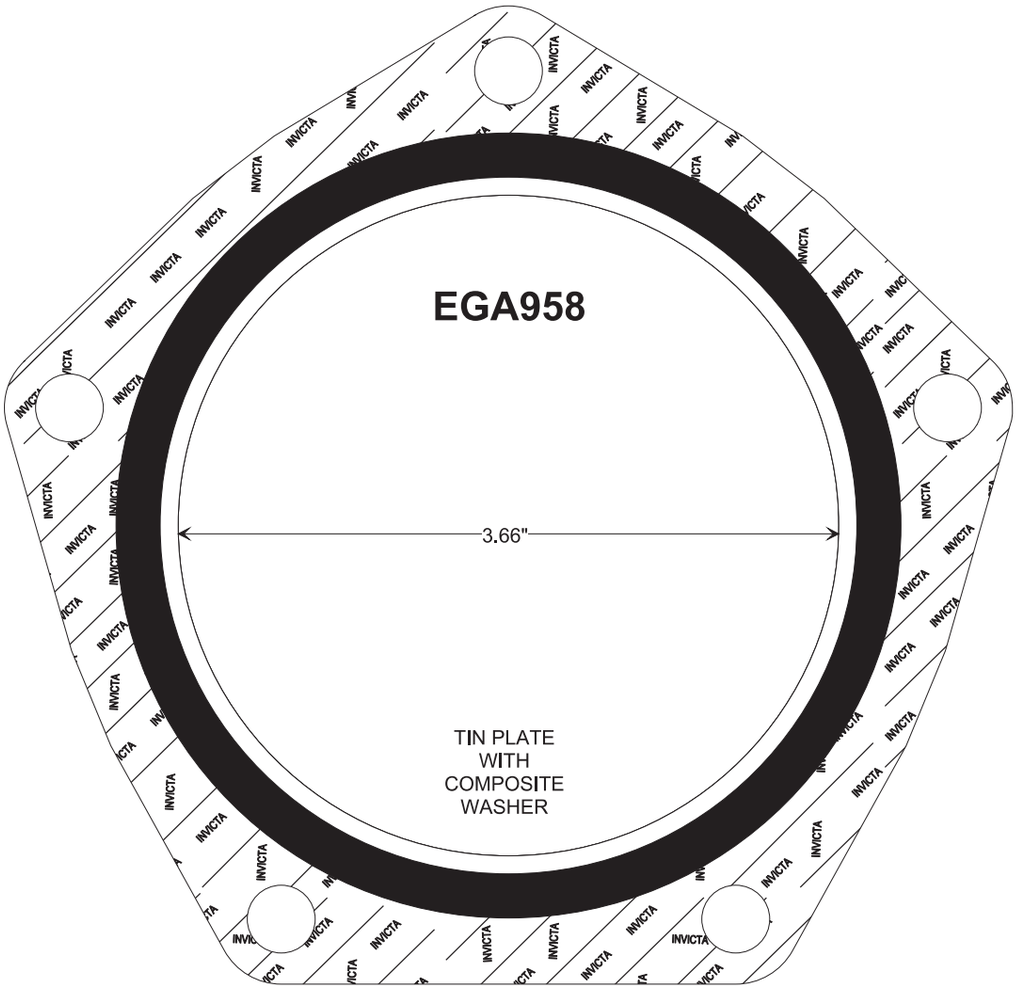

DESIGN STYLE 19

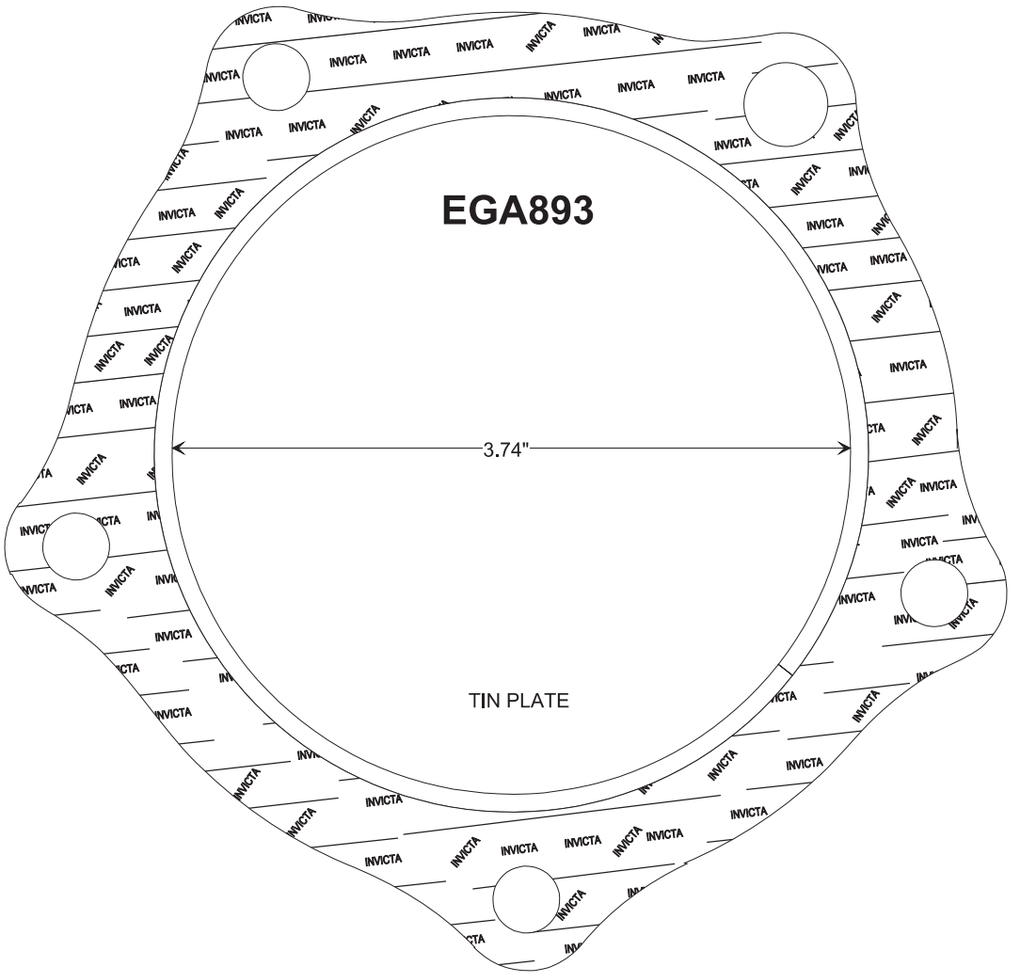

DESIGN STYLE 19

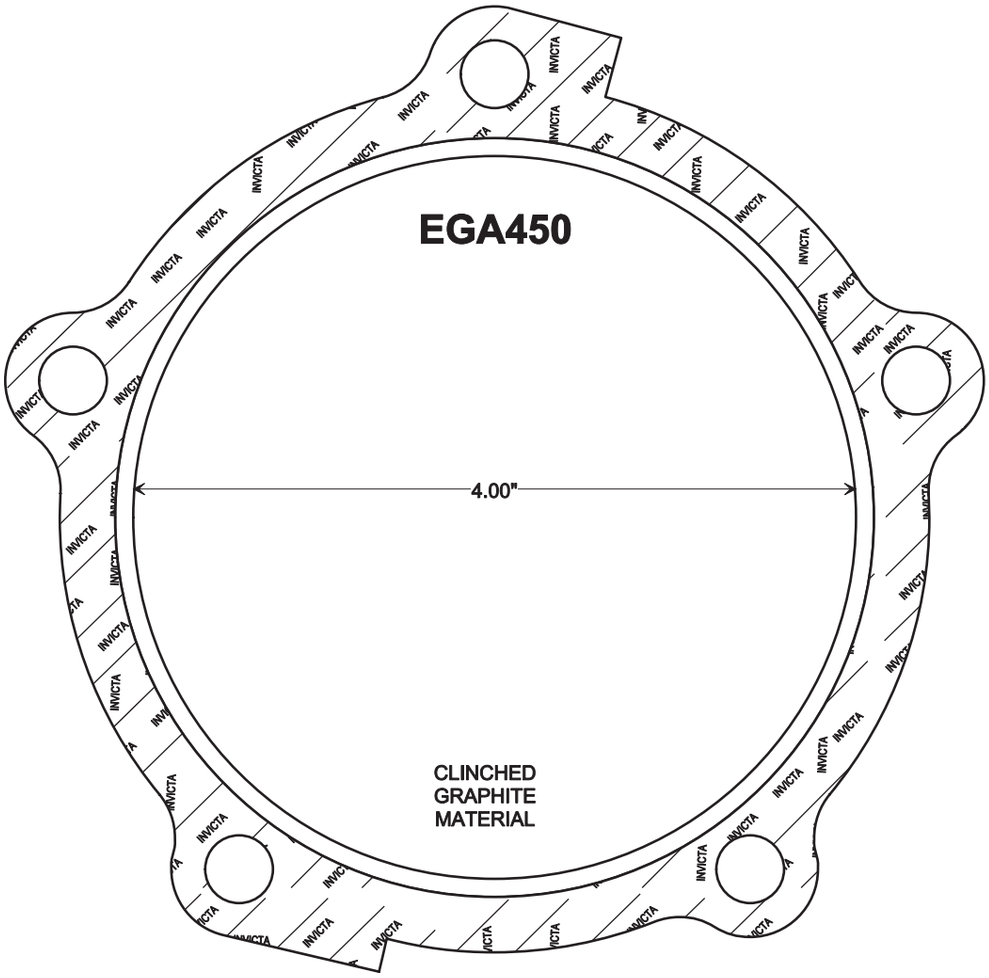

DESIGN STYLE 19

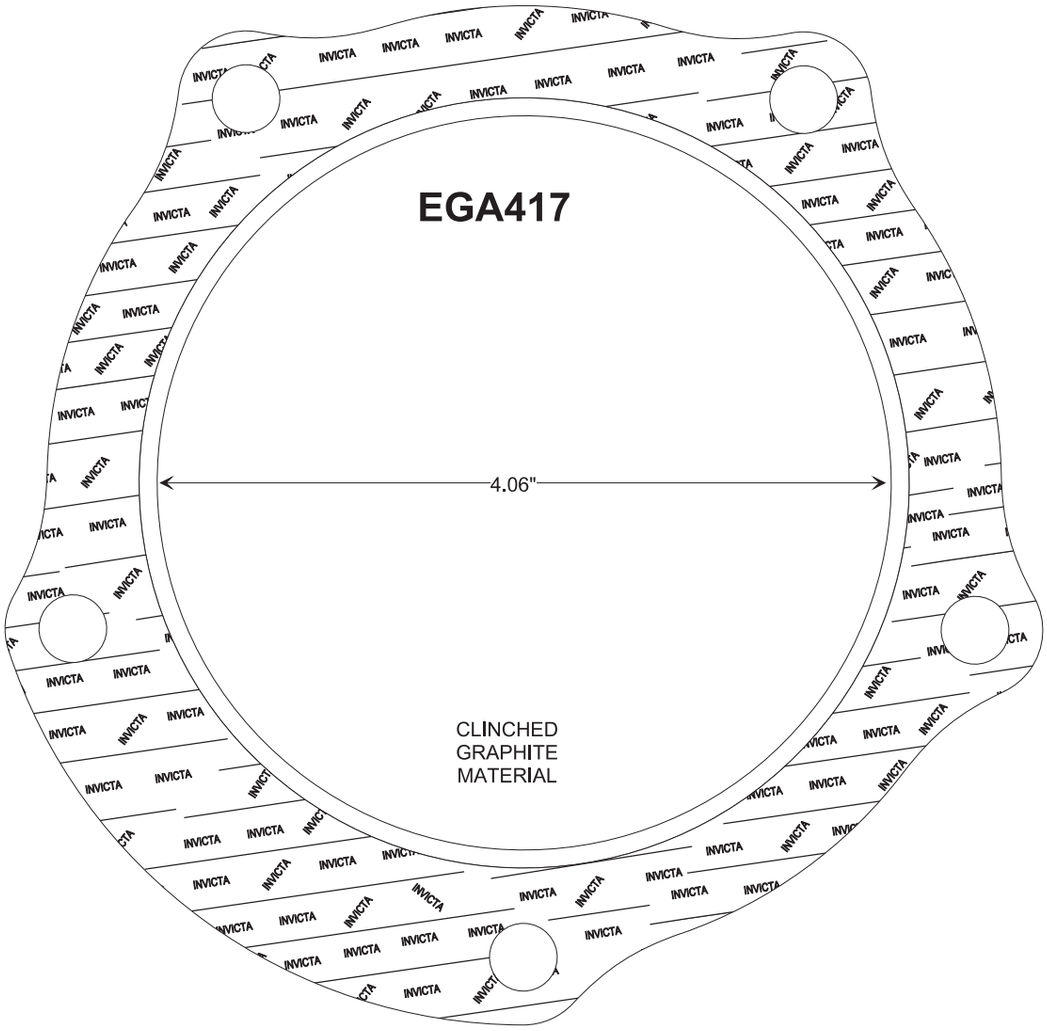

DESIGN STYLE 19

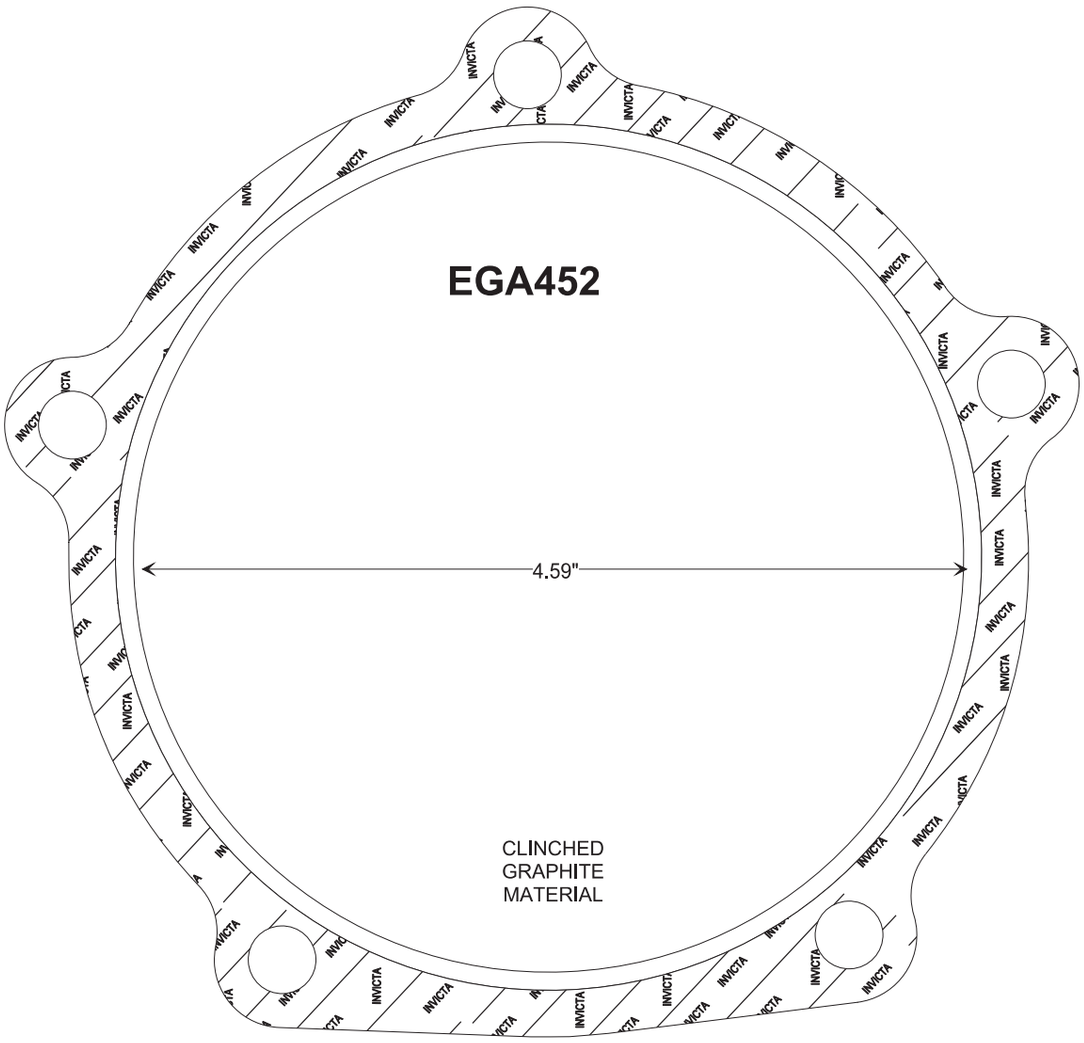

DESIGN STYLE 19

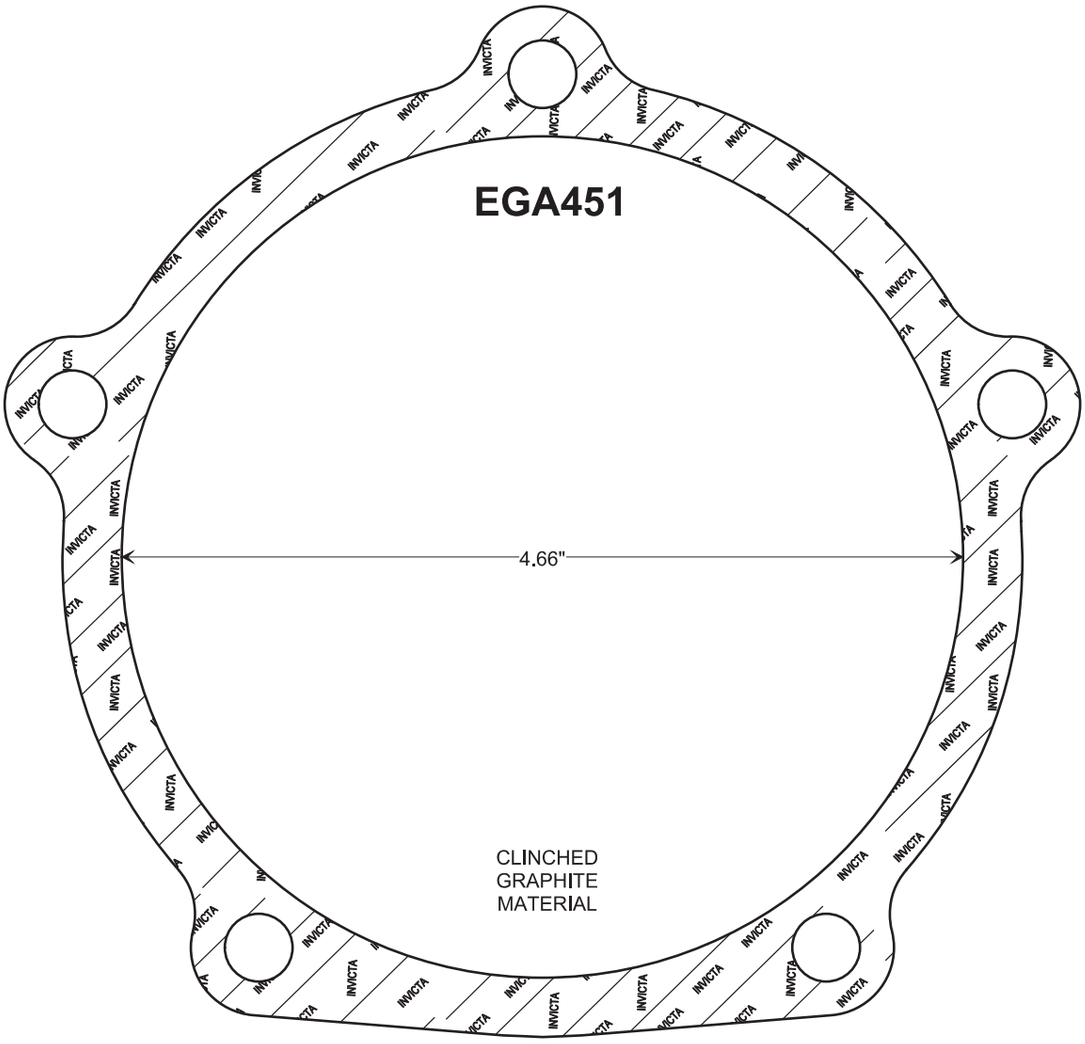

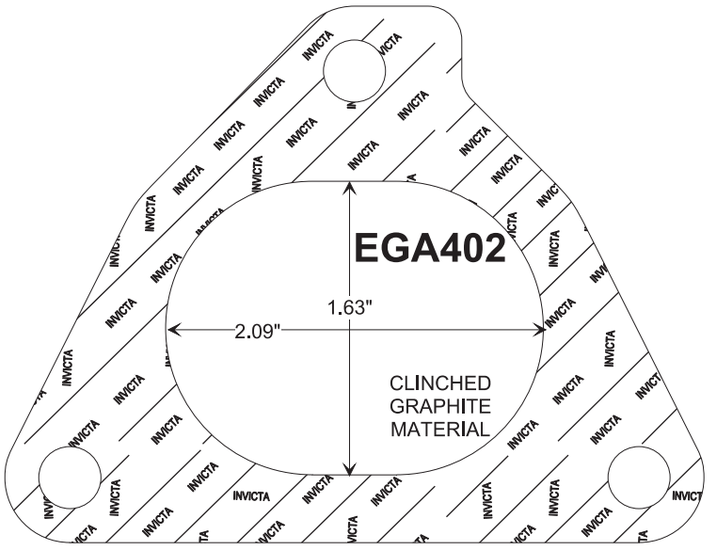

DESIGN STYLE 19

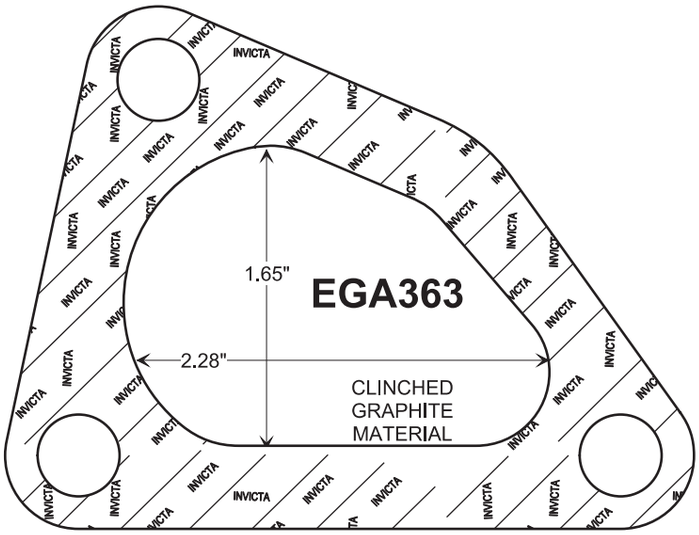

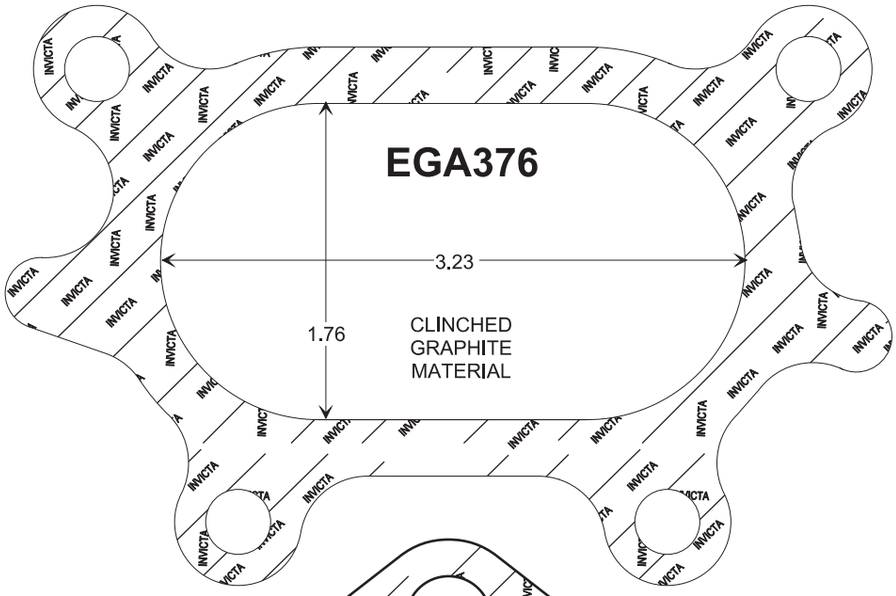

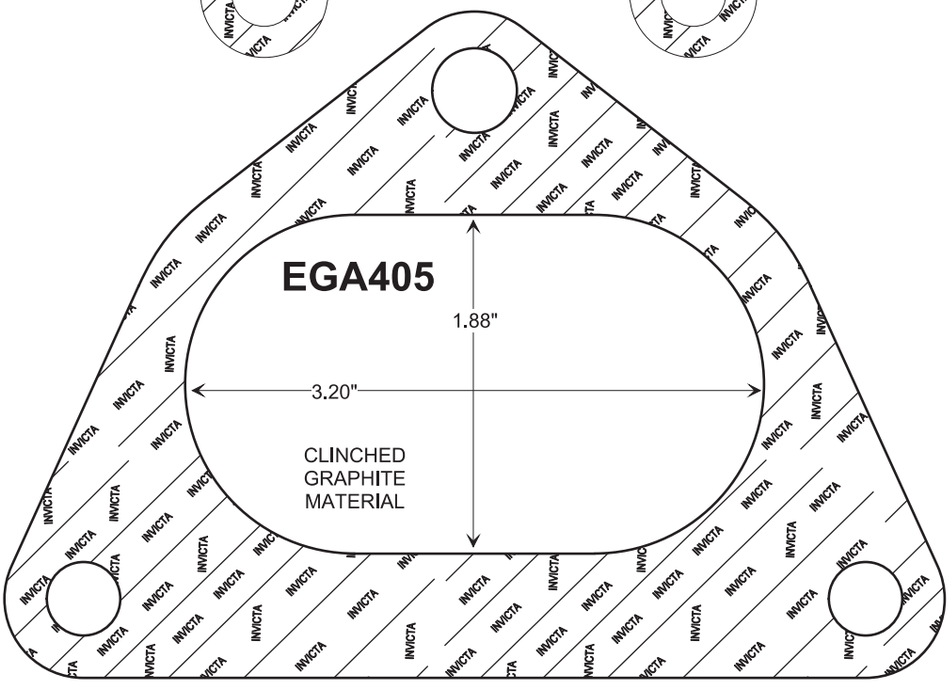

DESIGN STYLE 19

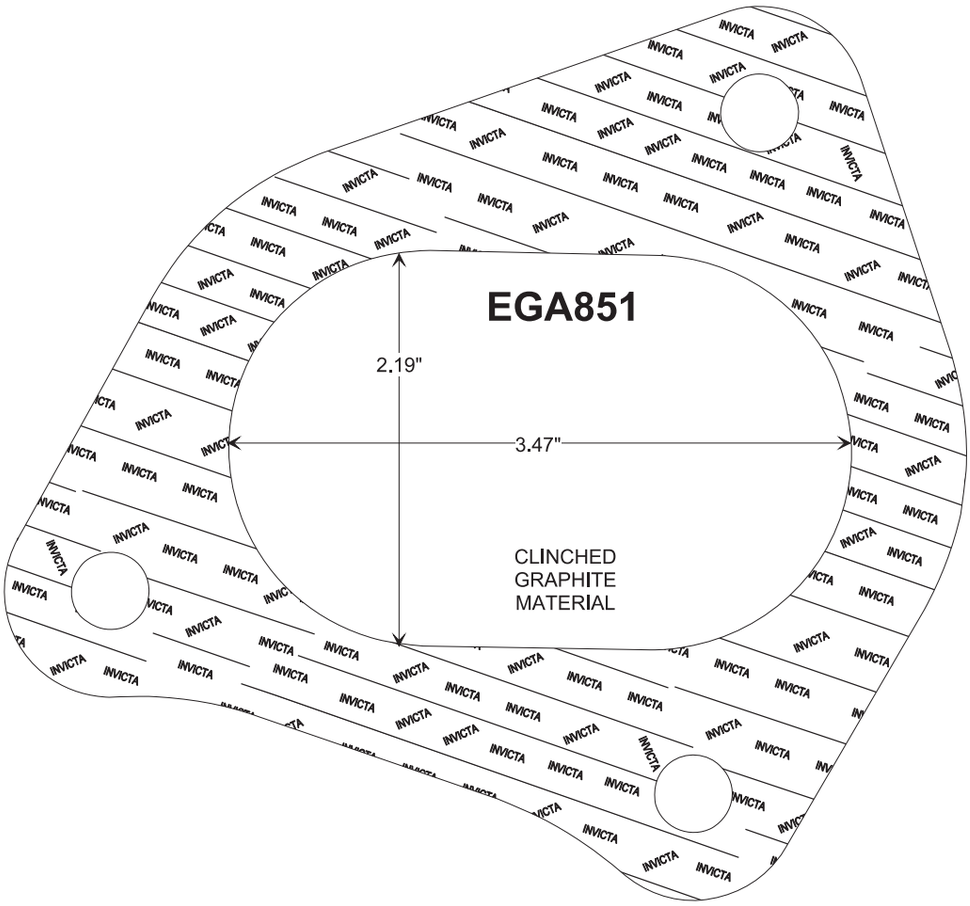

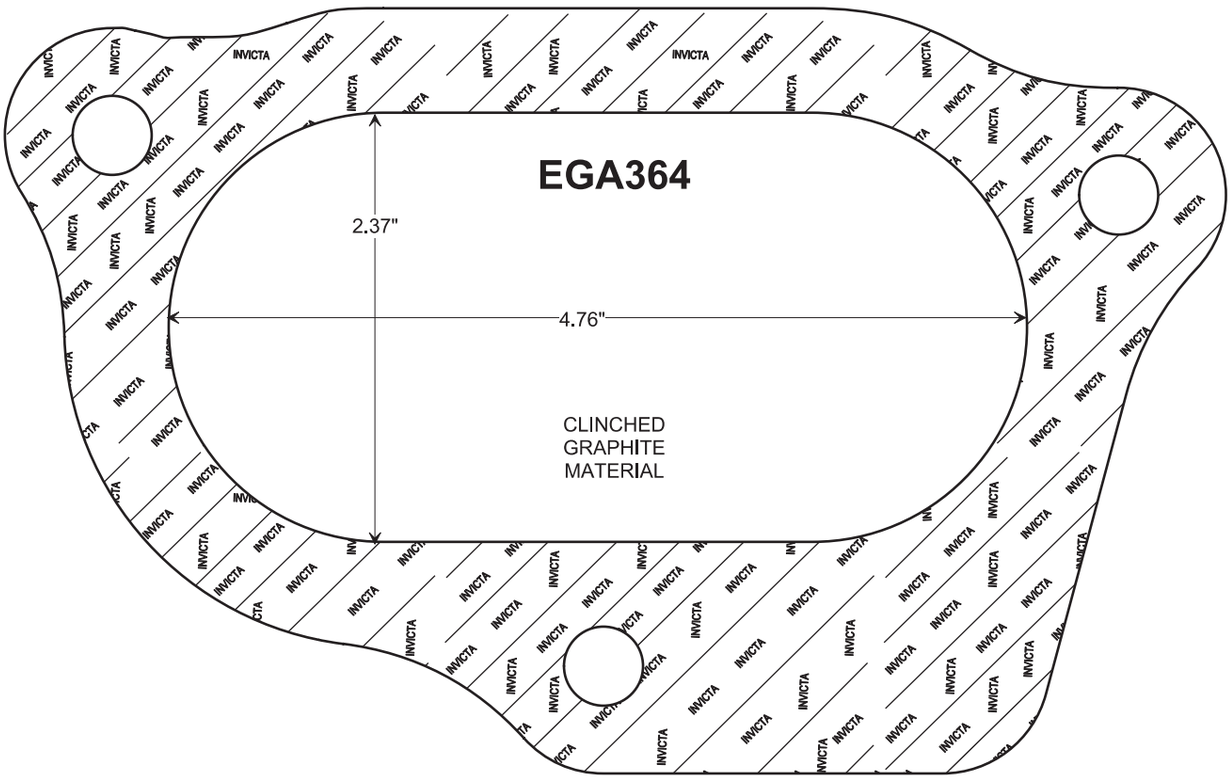

DESIGN STYLE 19

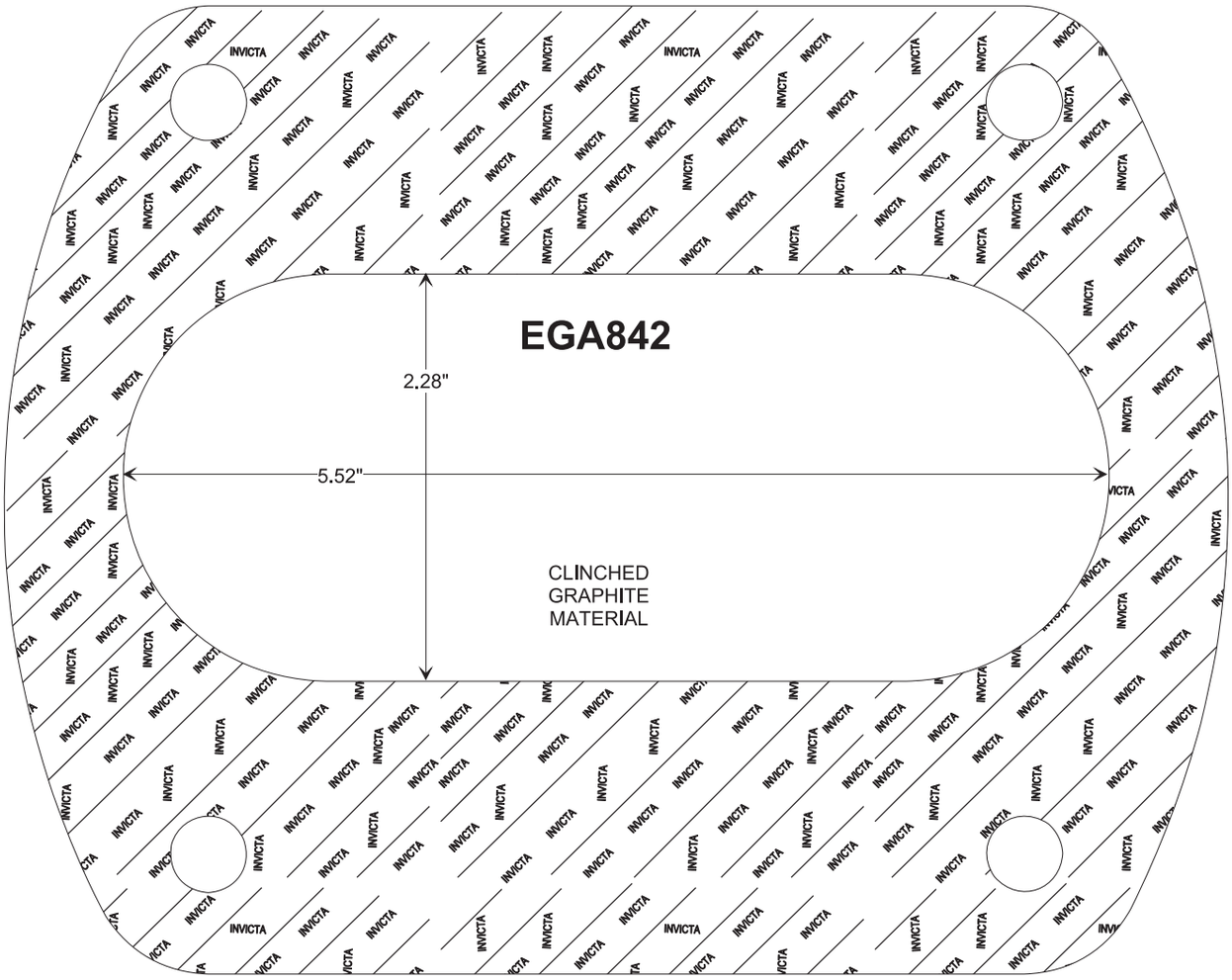

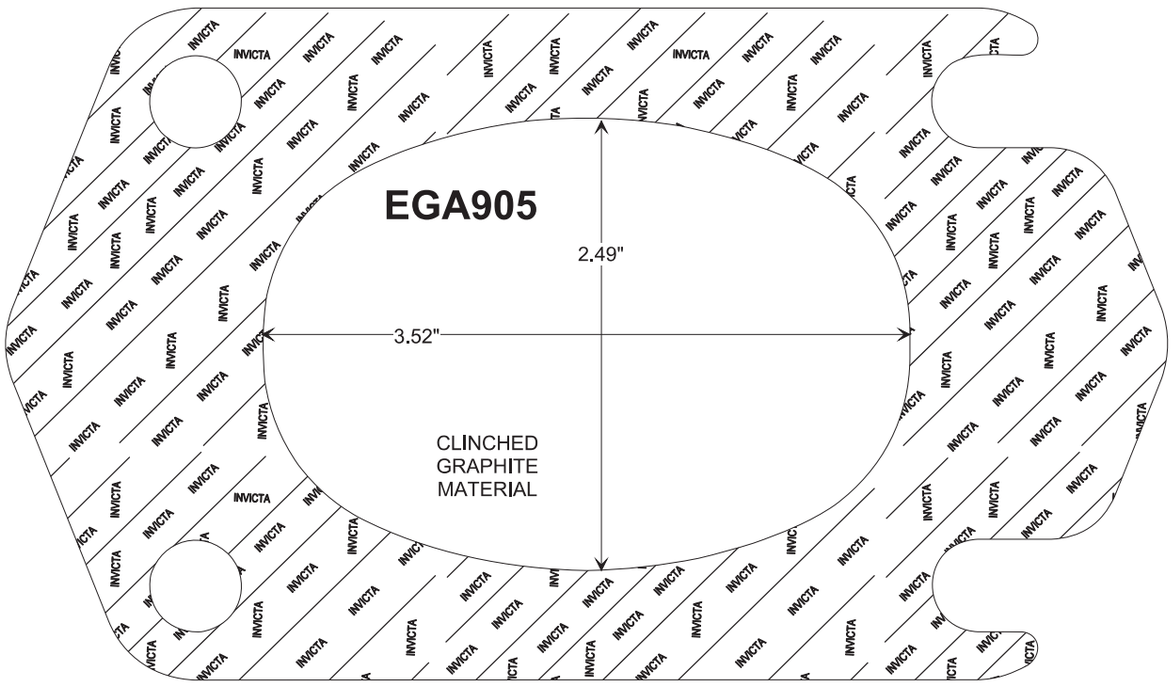

DESIGN STYLE 19

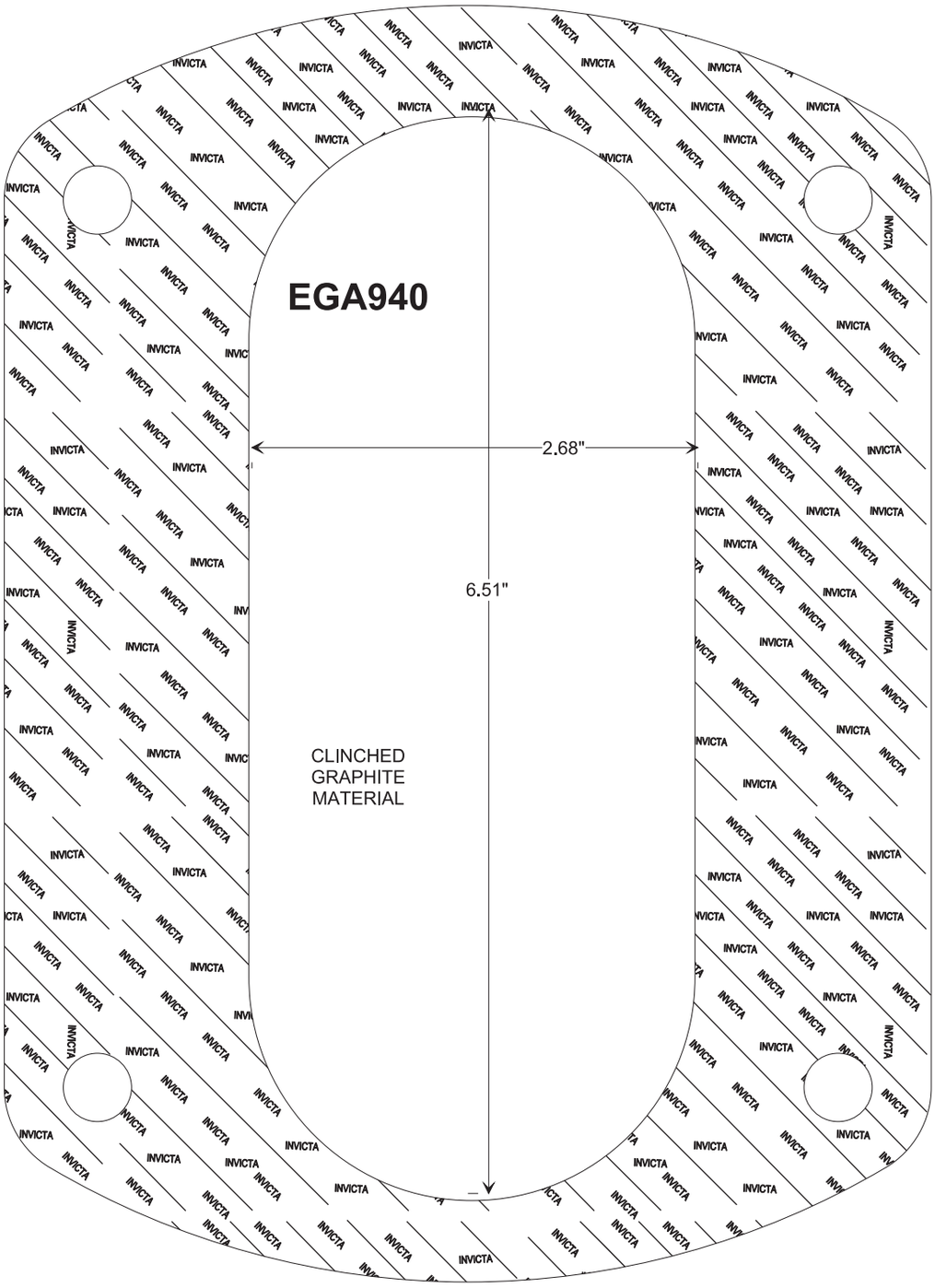

DESIGN STYLE 19

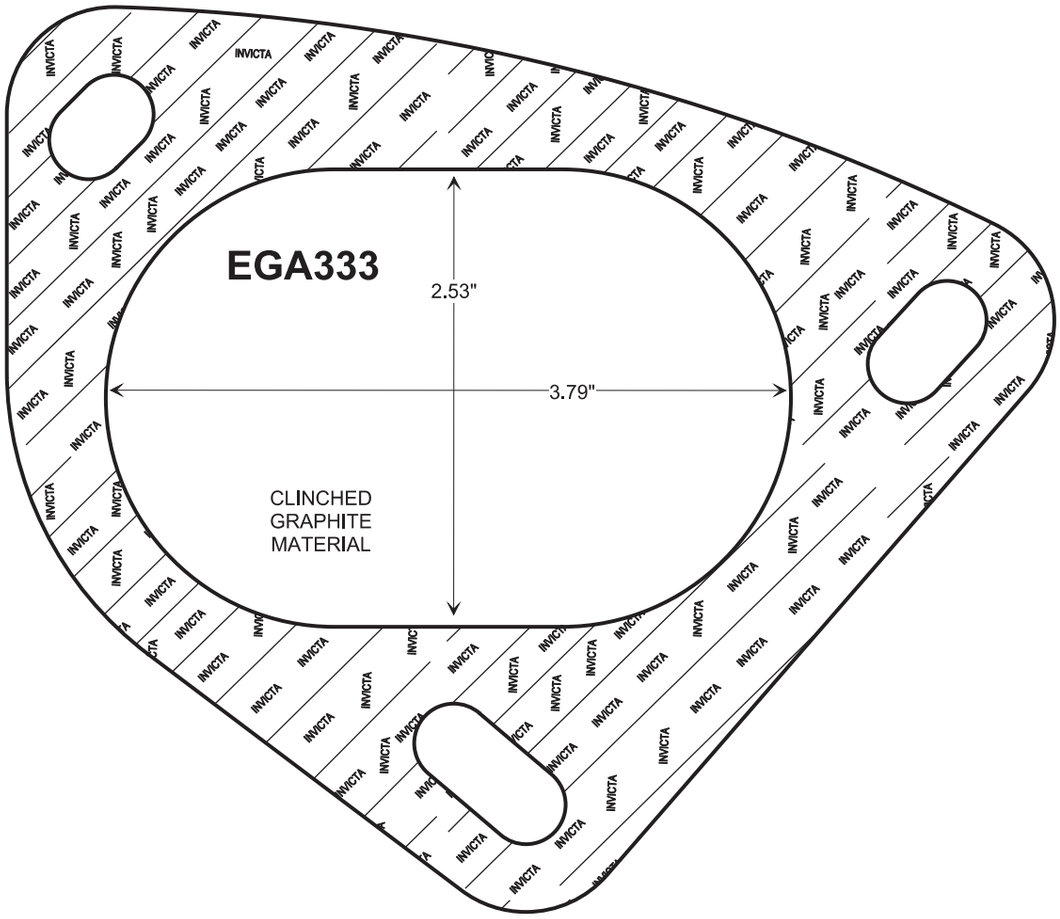

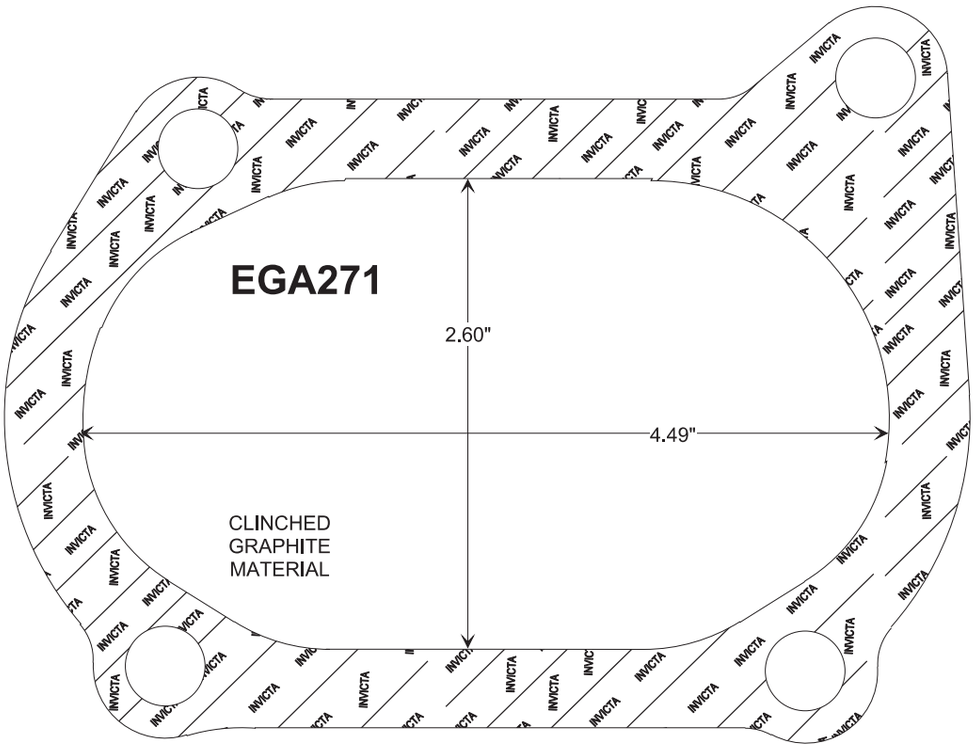

DESIGN STYLE 19

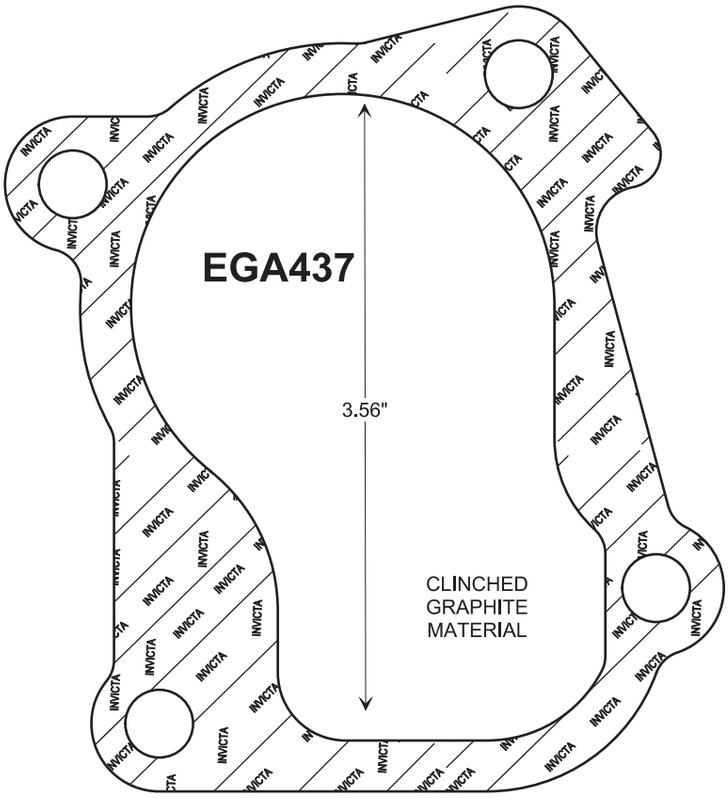

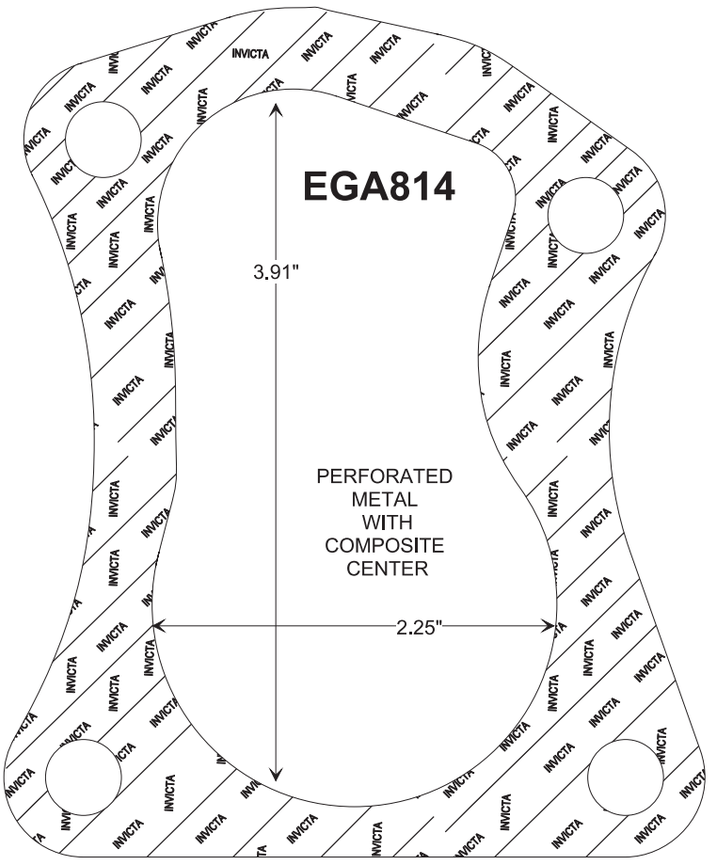

DESIGN STYLE 19

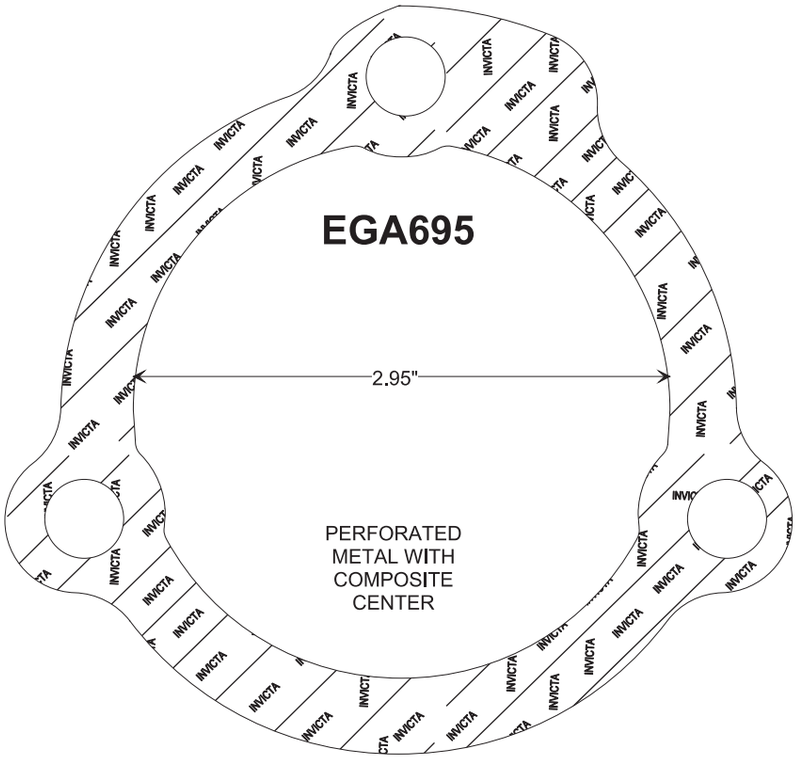

NOTES